This product utilizes **R-454B** *refrigerant*

MRCOOL® Advantage Series

Installation & Owner's Manual

MODELS:

A-*-HP-WMAH-115D-O
A-*-HP-WMAH-230D-O
A-*-HP-C-115D-O
A-*-HP-C-230D-O



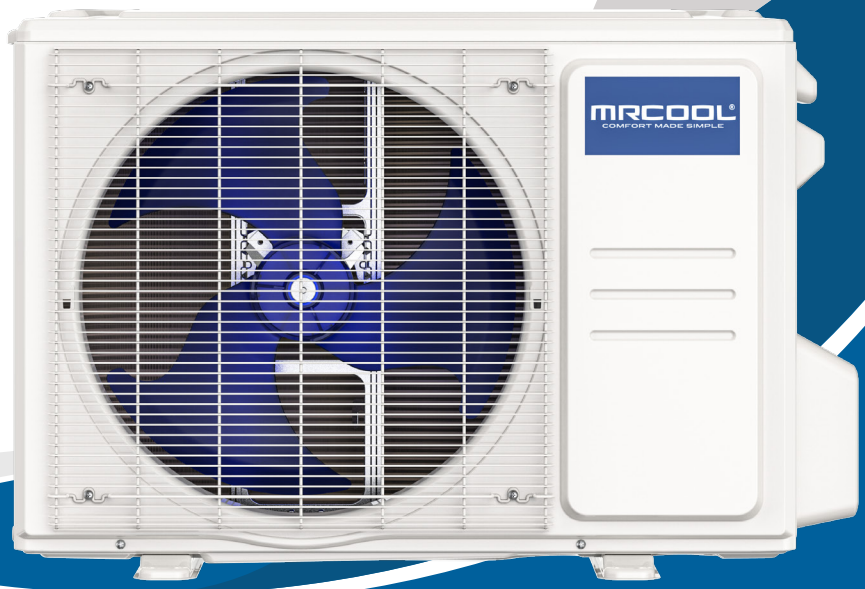

Read this manual carefully before installation and keep it where the operator can easily find it for future reference.

Due to updates and constantly improving performance, the information and instructions within this manual are subject to change without notice.

Version Date: October 29, 2026
Please visit www.MRCOOL®.com/documentation to ensure you have the latest version of this manual.

MRCOOL®
COMFORT MADE SIMPLE

CONTENTS

1 SAFETY 2
2 PACKING LIST 10
3 UNIT OVERVIEW 11
3.1 Packing and Unpacking the Unit 11
3.2 Installation Summary 11
3.3 Parts Overview 14
4 FEATURES 15
4.1 Indoor Unit Display 15
4.2 Additional Features 16
4.3 Setting Angle of Airflow 17
4.4 Manual Operation 18
5 INDOOR UNIT INSTALLATION 18
5.1 Select Installation Location 18
5.2 Connective Piping Wall Hole 19
5.3 Refrigerant Piping & Drain Hose Preparation 21
5.4 Electrical Work Preparation 25
5.5 Wrap Piping & Wires 26
5.6 Mount Indoor Unit 27
6 OUTDOOR UNIT INSTALLATION 29
6.1 Select Installation Location 29
6.2 Drain Joint Installation 30
6.3 Anchoring of Unit 31
6.4 Signal & Power Cable Connection 32
7 REFRIGERANT PIPING CONNECTION 33
7.1 Pipe Connection Precautions 33
7.2 Optional Pipe Connection Torque Requirements 35
7.3 Connecting Pipe to Outdoor Unit 36
8 AIR EVACUATION 36
8.1 Evacuation Instructions 36
9 ELECTRICAL & GAS LEAK CHECKS 39
9.1 Electrical & Gas Leak Checks 39
10 TEST RUN 40
11 CARE & MAINTENANCE 41
12 POST INSTALLATION 43
12.1 Troubleshooting 43
12.2 Error Display (Indoor Unit) 46
12.3 Error Display (Outdoor Unit with Auxiliary Board) 48
12.4 Quick Maintenance by Error Code 49

Safety Precautions

Read Before Using

Incorrect usage may cause serious damage or injury.

The symbols below are used throughout this manual to indicate instructions that should be followed closely or actions that should be avoided to prevent death, injury, and/or property damage.

WARNING	**Indicates that ignoring instructions may cause death or serious injury.**
CAUTION	**Indicates that ignoring instructions may cause bodily injury, damage to the unit, or other surrounding property.**
	Indicates that you should NEVER perform the indicated action.

WARNING

INSTALLATION MUST BE PERFORMED BY AN AUTHORIZED DEALER OR SPECIALIST. DEFECTIVE INSTALLATION CAN CAUSE WATER LEAKAGE, ELECTRICAL SHOCK, OR FIRE.

******ELECTRICAL WORK MUST BE COMPLETED BY A QUALIFIED ELECTRICAL TECHNICIAN******

DO NOT turn on the power until the installation and all work has been completed.

DO NOT let substances or gases other than the refrigerant enter the unit when connecting refrigerant piping. The presence of other gases or substances will lower the unit's capacity and may cause abnormally high pressure in the operation cycle. This may cause explosion or injury.

DO NOT allow children to play with the appliance. Children must be supervised around the unit at all times.

1. Installation must be performed according to the installation instructions. Improper installation could cause water leakage, electrical shock, fire, and could void the warranty. (In North America, all wiring/electrical work must be performed in accordance with the requirements of NEC and CEC by authorized personnel only.)
2. Contact an authorized HVAC technician for repair or maintenance of this unit. This appliance must be installed in accordance with national wiring regulations.
3. Only use the included accessories, parts, and specified parts for installation. Using non-standard parts can cause water leakage, electrical shock, fire, and/or failure of the unit.
4. Install the unit in a firm location that can support the unit's weight. If the location cannot support the unit's weight, or the installation is not done properly, the unit may drop and cause serious injury and damage.
5. When moving or relocating the air conditioner, consult experienced service technicians for disconnection and re-installation of the unit.
6. In certain functional environments (such as kitchens and server rooms etc.), The use of specially designed units are highly recommended.
7. This appliance is not intended for use by persons (including children) with reduced physical, sensory or mental capabilities, or lack of experience and knowledge, unless they have been given supervision or instruction concerning use of the appliance by a person responsible for their safety. Children should be supervised to ensure that they do not play with the appliance.
8. Do not insert fingers, rods or other objects into the air inlet or outlet. This may cause injury, since the fan may rotate at high speeds.
9. Do not operate the unit in a wet room such as a bathroom or laundry room. Exposure to water can cause electrical components to short circuit.
10. Do not directly expose body to cool air for prolonged periods of time.
11. Appropriately ventilate the area if the unit is used together with other heating devices to avoid oxygen deficiency.

ELECTRICAL WARNINGS

******ELECTRICAL WORK MUST BE COMPLETED BY A QUALIFIED ELECTRICAL TECHNICIAN******

⊘ ***DO NOT*** **share the power supply with other appliances. You must use an independent circuit to supply power. An improper or insufficient power supply could cause fire and/or electrical shock.**

1. Only use the specified power cord. If the power cord is damaged, it must be replaced by the manufacturer, its service agent, or similarly qualified persons in order to avoid a hazard.
2. Do not modify the length of the power supply cord or use an extension cord to power the unit.
3. Appropriate wiring standards, regulations, and the installation manual must be followed for all electrical work.
4. If connecting power to fixed wiring, an all-pole disconnection device must be incorporated in the fixed wiring in accordance with the wiring rules and must meet the following requirements: at least 1/8" (3 mm) of clearances in all poles, a leakage current that may exceed 10 mA, and a residual current device (RCD) having a rated residual operating current not exceeding 30 mA.
5. For all electrical work, fuse the specified cables. Connect cables tightly and clamp them securely to prevent external forces from damaging the terminal. Improper electrical connections could overheat, causing fire and/or electrical shock.
6. All wiring must be properly arranged to ensure that the control board cover can close properly. If the control board cover is not properly closed, it can lead to corrosion and cause the connection points on the terminal to heat up, catch fire, or cause electrical shock.
7. The product must be properly grounded at the time of installation to prevent electric shock.
8. Disconnection must be incorporated in the fixed wiring in accordance with the wiring guidelines.

CARE & MAINTENANCE WARNINGS

1. Before cleaning, turn off the device and disconnect. Failure to do so can cause electric shock.
2. Do not clean the unit with excessive amounts of water.
3. Do not clean the unit with combustible cleaning agents. Combustible cleaning agents can cause damage or result in a fire.

CAUTION

⊘ ***DO NOT*** **operate the unit with wet hands. This can result in electric shock.**
⊘ ***DO NOT*** **use the device for any other purpose than its intended use.**
⊘ ***DO NOT*** **climb or place objects on top of the outdoor unit.**
⊘ ***DO NOT*** **allow the unit to operate for long periods of time with doors or windows open, or if the humidity is high.**

1. Turn off the unit and disconnect from power if unit is not in use for long periods of time.
2. The product must be properly grounded during installation or electrical shock could occur.
3. Turn off and unplug unit during storms and severe weather.

FLAMMABLE REFRIGERANT USE WARNING

1. To defrost and clean the unit, use manufacturer instructions.
2. Store the appliance in a room away from continuously operating ignition sources. (For example, open flames, and operating gas appliance, or an operating electric heater.
3. Do not pierce or burn unit.
4. Be aware that refrigerants may be odorless.
5. The unit is equipped with a leak detection system. The unit must be powered except for service. When the refrigerant sensor detects refrigerant leakage, the indoor until will display an error code and emit a buzzing sound, the compressor of the outdoor unit will immediately stop, and the indoor fan will start running. The service life of the refrigerant sensor is 15 years. When the refrigerant sensor malfunctions, the indoor unit will display the error code "FHCC". The refrigerant sensor can not be repaired and can only be replaced by MRCOOL®. It can only be replaced with a sensor specified by MRCOOL®.

FLAMMABLE REFRIGERANT USE WARNING

1. Installation (Where refrigerant pipes are allowed.)

- Only HVAC certified personnel must work on, or break a refrigerant circuit.
- Maintenance and repair requiring assistance with flammable refrigerants should be carried out under the supervision of a certified HVAC technician.
- The installation of pipe-work should be kept to a minimum.
- Pipe-work should be protected from physical damage.
- Refrigerant pipes must be in compliance with local regulations.
- All mechanical connections must be made accessible for maintenance purposes.
- Take precautions to ensure that foreign materials (oil, water, dirt, etc.) do not enter the piping.
- When storing the piping, securely seal the opening by pinching, taping, etc.
- Unit must be stored in a well ventilated area where the room size corresponds to the room area designated for operation.
- Test joints with detection equipment that has a capability of 5g/year of refrigerant or better, with the equipment in standstill and under operation or under a pressure of at least standstill or operation conditions after installation. Detachable joints must not be used in the indoor side of the unit (brazed, welder joint can be used).
- In cases that require mechanical ventilation openings must be kept clear of obstructions.

2. When a FLAMMABLE REFRIGERANT is used, the requirement for installation space of unit and/or ventilation requirements are determined according to:

- The mass charge amount (M) used in the unit.
- The installation location.
- The type of ventilation of the location of the unit.
- Piping material, pipe routing, and installation must include protection from physical damage in operation and service. This must be in compliance with local codes and standards, such as ASHRAE 15, IAPMO Uniform Mechanical Code, ICC International Mechanical Code, or CSA B52. All field joints must be accessible for inspection prior to being covered or enclosed.
- Protection devices, piping and fittings must be protected as much as possible against adverse environmental effects. For example, against the danger of water collecting and freezing in relief pipes or against accumulation of dirt or debris.
- Piping in refrigeration systems must be designed and installed to minimize the likelihood of hydraulic shock, resulting in damage from the system.
- Steel pipes and components must be protected against corrosion with a rust-proof coating before applying insulation.
- Precautions must be taken against excessive vibration or movement of the unit.
- The minimum floor area of the room must be mentioned in the form of a table or a single figure without reference to a formula.
- After completion of field piping for split systems, the field pipework must be pressure tested with an inert gas and the vacuum tested prior to refrigerant charging according to the following requirements:
    a. The minimum test pressure for the low side of the system must be the low side design pressure, unless the high side of the system can not be isolated from the low side system. If this is the case, the entire system must be pressure tested to the low side design pressure.
    b. The test pressure after removal of pressure source must be maintained for at least 1h with no decrease of pressure indicated by the test gauge, with test gauge resolution not exceeding 5% of the test pressure.
    c. During the evacuation test, after achieving a vacuum level specified in the manual or less, the refrigeration system must be isolated from the vacuum pump and the pressure must not rise over 1500 microns within 10 minutes. The vacuum pressure level must be specified in the manual, and must be the lesser of 500 microns, or the value required for compliance with local codes and standards. This may vary between residential, commercial, and industrial building codes.
- Field-made refrigerant joints indoors must be tightness-tested according to the following requirements: the test method must have a sensitivity of 5 grams per year of refrigerant or better under a pressure of at least 0.25 times the maximum allowable pressure. No leak must be detected.

FLAMMABLE REFRIGERANT USE WARNING

- Any servicing must be performed only as recommended by the manufacturer.

3. Qualification of Workers

- Any maintenance, service, and repair operations must be under a qualified HVAC technician. Every working procedure that impacts safety must only be carried out by a competent professional The training of these procedures is carried out by national training organizations and/or manufacturers that are accredited to teach the standards set by legislation. All training must follow the ANNEX HH requirements of UL 60335-2-40 4th Edition.
- Examples for such working procedures are:
  a. Breaking into the refrigerating circuit.
  b. Opening of sealed components.
  c. Opening of ventilated enclosures.

Information Servicing

1. Checks to the Area

Prior to beginning work on systems that contain flammable refrigerants, safety checks are necessary to ensure that the risk of ignition is minimized. For repair to the refrigeration system, the following precautions must be complied before conducting work on the system.

2. Work Procedure

Work must be undertaken with standard procedures in order to minimize the risk of releasing flammable gas, or vapor while work is being performed.

3. General Work Area

All maintenance staff and others working in the local area must be instructed on the nature of the work being carried out. Avoid working in confined spaces.

4. Checking for Presence of Refrigerant

Check the area with appropriate refrigerant detectors before, and during work. This ensures that the technician is aware of potentially flammable atmospheres. Ensure that the leak detection equipment suitable for use with flammable refrigerants (i.e. no sparking, adequately sealed or intrinsically safe.)

5. Presence of Fire Extinguisher

If any hot work is conducted on the refrigeration equipment or any associated parts, appropriate fire extinguishing equipment will be available on hand. Have a dry power or CO_2 fire extinguisher adjacent to the charging area.

6. No Ignition Sources No persons carrying out work in relation to a refrigerating system involving the exposure of any pipe work must use any sources of ignition in a manner that will lead to fire or explosion. All possible ignition sources (such as smoking a cigarette) must be kept at a sufficient distance away from the installation site. This applies to any repair, removal, or disposal where refrigerant can possibly release into the surrounding area.

Before any work takes place, the area around the equipment must be surveyed to make sure there are no flammable hazards or ignition risks. "No Smoking" signs must be displayed at the site.

7. Ventilated Area

Before conducting hot work, ensure that you are in an area that is open or well ventilated. A degree of ventilation must continue during the period that the work is carried out. The ventilation should safely disperse any released refrigerant and preferably expel it externally into the atmosphere.

8. Checks to the Refrigeration Equipment

When electrical components are being changed, they must be the correct specification. The manufacturer's maintenance and service guidelines must be followed at all times. If in doubt, consult MRCOOL® for assistance. The following checks will be applied to installations using FLAMMABLE REFRIGERANTS:

- The actual refrigerant charge is in accordance with the room size within which the refrigerant containing parts are installed.
- The ventilation machinery and outlets are operating adequately and are not obstructed.
- If an indirect refrigerating circuit is being used, the secondary circuits must be checked for the presence of refrigerant.
- Marking on the equipment must be visible and legible. Any markings and signs that are illegible must be corrected.

FLAMMABLE REFRIGERANT USE WARNING

- Refrigeration pipe or components are installed in a position where they are unlikely to be exposed to any corrosive substances which may impact components that contain refrigerant. (Unless the components are constructed of materials which are inherently resistant to corrosion, or are suitably protected against corrosion.)

9. Checks to Electrical Devices

Repair and maintenance to electrical components must include initial safety checks and component inspection procedures. If a fault exists that could compromise safety, then the electrical supply will be disconnected from the circuit until it is satisfactorily dealt with. If the fault cannot be corrected immediately, but it is necessary to continue operation, a temporary solution may be used. This must be reported to the owner of the equipment so that all parties are aware and advised.

Initial Safety Checks Include:

- Capacitors are discharged: Performed in a safe manner to avoid the possibility of sparking.
- No live electrical components and exposed wiring while charging, recovering, or purging the system.
- There is continuity of grounding.

10. Sealed Electrical Components Must Be Replaced.

11. Intrinsically Safe Components Must Be Replaced.

12.Wiring

Check that wiring will not be subject to wear, corrosion, excessive pressure, vibration, sharp edges or any other adverse environmental effects. The check must also take into account the effects of aging or continual vibration from sources such as compressors or fans.

13. Detection of Flammable Refrigerants

Under no circumstances will potential sources of ignition be used when searching for or detection of refrigerant leaks. A halide torch (or any other detector using an open flame) must not be used.

The following leak detection methods are deemed acceptable for refrigerant systems. Electronic leak detectors may be used to detect refrigerant leaks. In the case of FLAMMABLE REFRIGERANTS, the sensitivity may not be adequate, or may need recalibration. (Detection equipment must be calibrated in a refrigerant-free area.) Ensure that the detector is not a potential source of ignition and is suitable for the refrigerant used. Leak detection equipment must be set at a percentage of the LFL of the refrigerant and must be calibrated to the refrigerant employed, and the appropriate percentage of gas (25% maximum) is confirmed.

Leak detection fluids are also suitable for use with most refrigerants but the use of detergents containing chlorine must be avoided as the chlorine may react with the refrigerant and corrode the copper pipe-work.

Note: Examples of leak detection fluids are the bubble method and fluorescent method agents. If a leak is suspected, all open flames must be removed/extinguished. If a leakage of refrigerant is found which requires brazing, all of the refrigerant must be recovered from the system, or isolated (by any means of shut off valves) in a part of the system remote from the leak. See the following instructions for removal of refrigerant.

14. Removal and Evacuation

When breaking into the refrigerant circuit to make repairs -or for any other purpose, conventional procedures must be used. However, for flammable refrigerants, it is important that best practice is followed, since flammability is a hazard.

The following procedures must be followed:

1. Safely remove refrigerant following local regulations.
2. Evacuate
3. Purge the circuit with inert gas (optional for A2L)
4. Evacuate (optional for A2L)
5. Continuously flush or purge with inert gas when using flame to open circuit
6. Open the circuit

The refrigerant charge must be recovered into the correct recovery cylinders if venting is not allowed by local codes. For appliances containing flammable refrigerants the system must be purged with oxygen-free nitrogen to render the appliance safe for flammable refrigerants. Repeat as necessary. Do not use compressed air or oxygen for purging refrigerant systems.

FLAMMABLE REFRIGERANT USE WARNING

For appliances containing flammable refrigerants, purging refrigerants will be conducted by breaking the vacuum in the system with oxygen-free nitrogen. Then, continue to fill until the working pressure is achieved. Next, vent to the atmosphere. Finally, pull down into a vacuum (optional for A2L). This process will be repeated until there is no refrigerant within the system (optional for A2L). When the final oxygen-fee nitrogen charge is used, the system must be vented down to atmospheric pressure to enable work to take place. Do not place the outlet for the vacuum pump near any ignition sources. Proper ventilation must be available.

15. Charging Procedures

In addition to conventional charging procedures, follow these requirements:

- Use appropriate tools only, (in case of uncertainty please consult MRCOOL® on tools to use with FLAMMABLE Refrigerants).
- Ensure that contamination and mixing of different refrigerants does not occur when using charging equipment. Shorten hoses and lines to minimize the amount of contained refrigerant.
- Keep cylinders in an upright position.
- Ensure that the refrigeration system is grounded before charging the system with refrigerant.
- Label the system after charging is complete.
- Take extreme care to not overfill the refrigeration system.
- Before to recharging the system, pressure test with oxygen-free nitrogen (OFN). The system must be leak tested on completion of charging, but not before commissioning. A follow-up leak test must be conducted before leaving the site.

16. Decommissioning

Before conducting this procedure, it is essential that the HVAC technician is completely familiar with the equipment and details. It is good practice that all refrigerants are recovered safely. Before conducting this task, an oil and refrigerant sample must be taken in case analysis is required prior to reuse of recovered refrigerant. It is essential that electrical power is available before the task is started.

a.) Become familiar with the equipment and its operation.
b.) Electrically isolate the system.
c.) Before attempting the procedure ensure that
- Mechanical handling equipment is available, if required, for handling refrigerant cylinders.
- All personal protective equipment is available and is correctly utilized.
- The recovery process is supervised at all times by a certified HVAC technician.
- Recovery equipment and cylinders follow the correct standards.

d.) Pump down refrigerant system, if possible.
e.) If a vacuum is not possible, make a manifold so that refrigerant is removed from various parts of the system.
f.) Ensure that the cylinder is situated on the scales before recovery takes place.
g.) Start the recovery machine and operate in accordance with instructions.
h.) Do not overfill cylinders (No more than 80% volume liquid charge).
i.) Do not exceed the maximum working pressure of the cylinder, even temporarily.
j.) When the cylinders have been filled correctly and the process is complete, ensure that the cylinders and the equipment are promptly removed from the site, and all isolated valves on the equipment are closed off.
k.) Recovered refrigerant must not be charged into another refrigeration system unless it is cleaned and checked.

17. Labeling

Equipment must be labeled stating that it has been decommissioned and properly emptied of refrigerant. The label must be dated and signed. For appliances containing FLAMMABLE REFRIGERANTS, ensure that there are labels on the equipment stating that the equipment contains FLAMMABLE REFRIGERANT.

FLAMMABLE REFRIGERANT USE WARNING

18. Recovery

When removing refrigerant from a system, either for servicing or decommissioning, is it recommended that all refrigerants are removed safely. When transferring refrigerant into cylinders, ensure that only appropriate refrigerant recovery cylinders are employed. Ensure that the correct number of cylinders for holding the total system charge is available All cylinders designated for the recovered refrigerant must be labeled for that refrigerant (i.e. special cylinders for the recovery of refrigerant.) Cylinders must be complete and in good working order, with pressure-relief valve and associated shut-off valves. Empty recovery cylinders are evacuated and, if possible, cooled before recovery occurs.

The recovery equipment must be in good working order, and with a set of instructions stating that the equipment is suitable for recovery of flammable refrigerant. If in doubt, consult MRCOOL®. In addition, a set of calibrated weighing scales should be available and in good working order. Hoses must be intact with leak-free disconnect couplings and in good condition.

The recovered refrigerant must be processed according to local code. It must be in the correct recovery cylinder, and the relevant waste transfer note arranged. Do not mix refrigerants in recovery units and especially not in cylinders. If compressors or compressor oils are removed, ensure that they have been evacuated to an acceptable level to make certain that flammable refrigerant does not remain within lubricant. Do not heat the compressor body by an open flame or other ignition source to accelerate the process. When oil is drained from a system, it must be carried out safely.

19. Transportation, Making, and Storage for Units

1. Transport of equipment containing flammable refrigerants in compliance with transportation regulations.
2. Marking of equipment using signs in compliance with local regulation.
3. Disposal of equipment using flammable refrigerants is in compliance with local regulation.
4. Storage of equipment/appliances: the storage of equipment must be in accordance with the manufacturer's instructions.
5. Storage of packed (unsold) equipment: Storage package protection should be constructed such that mechanical damage to the equipment inside the package will not cause a leak of the refrigerant charge. The maximum number of pieces of equipment permitted to be stored together will be determined by local regulations.

Symbols Displayed on Indoor & Outdoor Unit		
	**WARNING**	This symbol shows that this appliance uses a flammable refrigerant. If the refrigerant is leaked and exposed to an external ignition source, there is a risk of fire.
	**CAUTION**	This symbol shows that the operation manual should be read carefully.
	**CAUTION**	This symbol shows that a service personnel should be handling this equipment with reference to the installation manual.
	**CAUTION**	
	**CAUTION**	This symbol shows that information is available such as the operating manual or installation manual.

ELECTRICAL WARNINGS

- Only use the specified wire. If the wire is damaged, it must be replaced by MRCOOL®, or an HVAC technician in order to avoid a hazard.
- The product must be properly grounded at the time of installation, or electric shock may occur.
- For all electrical work, follow all local wiring standards, regulations, and the Installation Manual.
- Connect cables tightly, and clamp them securely to prevent external forces from damaging the terminal. Improper electrical connections can overheat, cause fire, and result in electric shock. All electrical connections must be made according to the Electrical Connection Diagram located on the panels of the indoor and outdoor units.
- All wiring must be arranged to ensure that the control board cover can properly close. If the control board cover is not fully closed, it can lead to corrosion and cause the connection points on the terminal to heat up, catch fire, or cause electrical shock.
- Disconnection must be incorporated in the fixed wiring in accordance with the wiring rules.
- DO NOT share the electrical outlet with other appliances. Improper or insufficient power supply can cause fire or electric shock.
- If connecting power to fixed wiring, an all-pole disconnection device which has at least 3mm clearances in all poles,and has a leakage current that may exceed 10mA, the residual current device (RCD) having a rated residual operating current not exceeding 30mA, and disconnection must be incorporated in the fixed wiring in accordance with the wiring rules.

WARNINGS FOR PRODUCT INSTALLATION

- Turn off the unit and disconnect the power before performing any installation or repair. Failure to do so can cause electric shock.
- Installation must be performed by a certified HVAC technician. Defective installation can cause water leakage, electrical shock, or fire.
- Installation must be performed according to the installation instructions. Improper installation can cause water leakage, electrical shock, or fire. Contact an authorized HVAC technician for repair or maintenance of this unit.
- This appliance must be installed in accordance with local regulations. Only us the included accessories, parts, and specific parts for installation.
- Using non-standard parts can cause water leakage, electric shock, fire, and can cause the unit to fail.
- Install the unit in a firm location that can support the unit's weight. If the chosen location cannot support the units weight, or the installation is not properly performed, the unit may drop, causing serious injury or damage.
- Install drainage piping according to the instructions in this manual. Improper drainage may cause water damage to your home and property.
- For units that have an auxiliary electric heater, do not install the unit within 3 ft (1 meter) of any combustible materials.
- For the units that have a wireless network function, the USB device access, replacement, maintenance operations must be carried out by a certified HVAC technician.
- DO NOT install the unit in a location that may be exposed to combustible gas leaks. If combustible gas accumulates around the unit, it may cause fire.
- DO NOT turn on power until all work has been completed.
- When moving or relocating the unit, consult an HVAC technician for disconnection and re-installation of the unit.
- How to install the appliance to supports, please read the details in "indoor unit installation" and "outdoor unit installation" sections of this manual.

NOTE ON FUSE SPECIFICATIONS

The unit circuit board (PCB) is designed with a fuse to provide over current protection. The specifications of the fuse are printed on the circuit board, for example: T3.15AL/250VAC, T5AL/250VAC, T3.15A/250VAC, T5A/250VAC, T20A/250VAC, T30A/250VAC, etc. **NOTE**: Only the blast-proof ceramic fuse can be used.

- Packing List

This system comes with the following accessories. Use all of the installation parts and accessories to install the unit. Improper installation my result in water leakage, electrical shock and fire, or cause the equipment to fail.

PART	LOOKS LIKE	QUANTITY	
Manuals	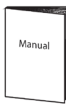	Installation Manual Owner's Manual Remote Control Manual	
Mounting Plate + Cardboard Template	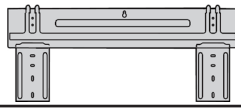	1	
Clip Anchor	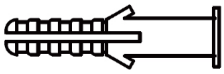	5	
Mounting Plate Fixing Screw		5	
Remote Control		1	
Fixing Screw for Remote Controller Holder		2	Optional Parts
Remote Control Holder	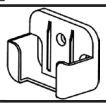	1	
AAA Battery	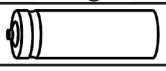	2	
Air Freshening Filter		1	
Seal		1	
Drain Joint (for cooling & heating models)	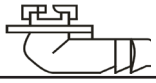	1	
Copper Nut Note: Used to connect the connecting pipes between indoor and outdoor units.		2	
Smart Controller Kit		1	

Name	Model	Pipe Specification		Note
		Liquid Side	Gas Side	
Connecting Pipe Assembly	9K	Φ1/4in (Φ6.35mm)	Φ3/8in (Φ9.52 mm)	Parts purchased separately. Consult MRCOOL® about proper pipe size of the purchased unit.
	12K	Φ1/4in (Φ6.35mm)	Φ3/8in (Φ9.52 mm)	
	18K	Φ1/4in (Φ6.35mm)	Φ1/82in (Φ12.7 mm)	
	24K	Φ3/8in (Φ9.52mm)	Φ5/8in (Φ16 mm)	
	30K	Φ3/8in (Φ9.52mm)	Φ5/8in (Φ16 mm)	
	36K	Φ3/8in (Φ9.52mm)	Φ5/8in (Φ16 mm)	

3 UNIT OVERVIEW

3.1 Packing and Unpacking the Unit

Instructions for Packing and Unpacking the Unit:

Unpacking the Indoor Unit:

1. Cut the sealing tape on the carton with a knife, one cut on the left, one cut in the middle, and one cut on the right.
2. Use the vice to take out the sealing nails on top of the box.
3. Open the box.
4. Take out the middle support plate (if included).
5. Take out the accessory package, and take out the connecting wire (if included).
6. Lift the machine out of the carton and lay flat.
7. Remove the left and right package foam or the upper and lower packaging foam, untie the packaging bag.

Unpacking the Outdoor Unit:

8. Cut the packing belt.
9. Take the unit out of the box.
10. Remove the foam from the unit.
11. Remove the packaging bag from the unit.

Packing Indoor Unit:

1. Put the indoor unit into the packing bag.
2. Attach the left and right package foam or the upper and lower packaging foam to the unit.
3. Place the unit into the box, then add the accessory package.
4. Close the box and seal with tape.
5. Use the packing belt if necessary.

Packing the Outdoor Unit:

6. Place the outdoor unit in the packing bag.
7. Place the bottom foam into the box.
8. Place the unit into the box, then add the upper packaging foam on to the unit.
9. Close the box and seal with tape.
10. Use the packing belt if necessary.

NOTE

Keep all packaging items in case they are needed for future use.

3.2 Installation Summary

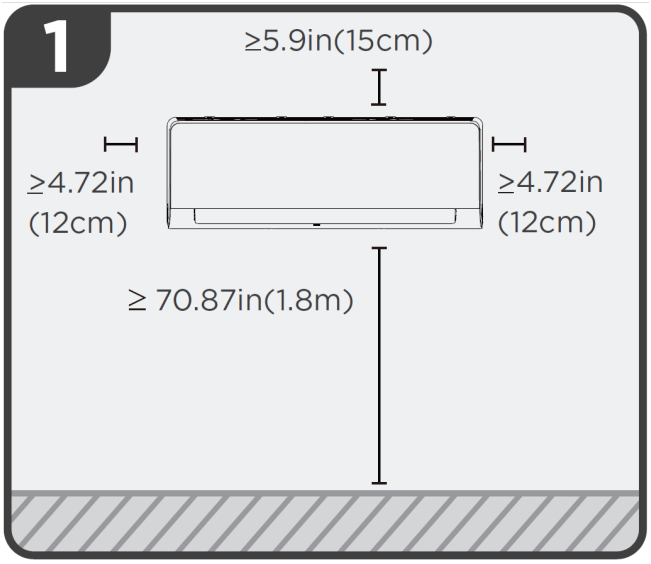

Select Install Location

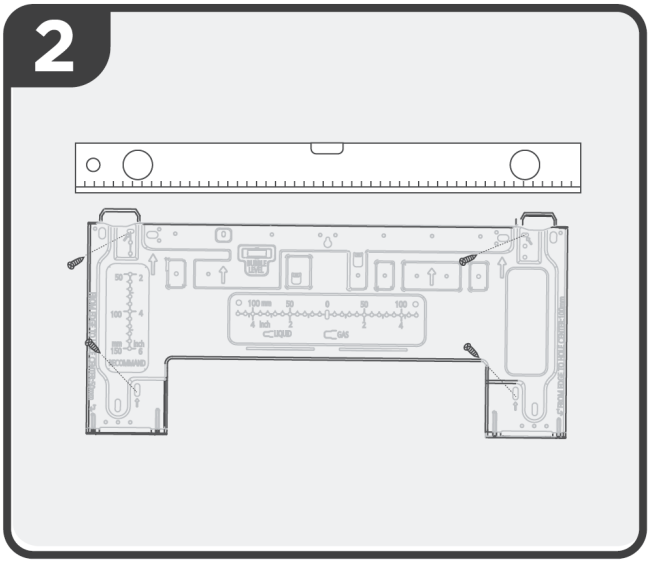

Attach Mounting Plate

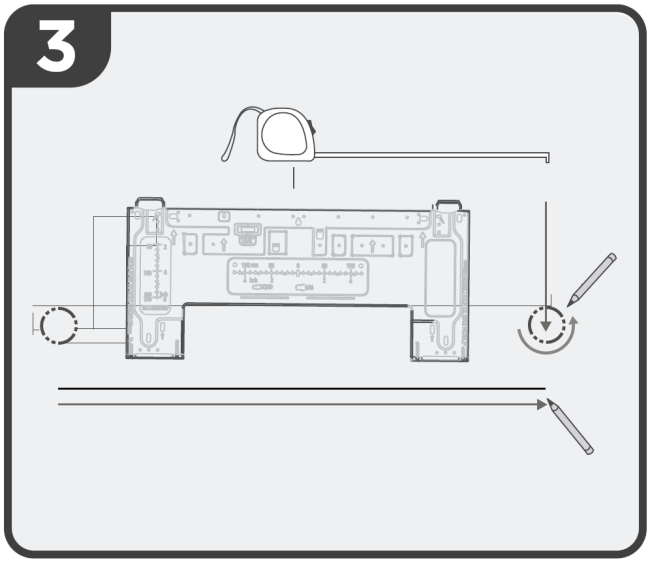

Determine wall hole placement

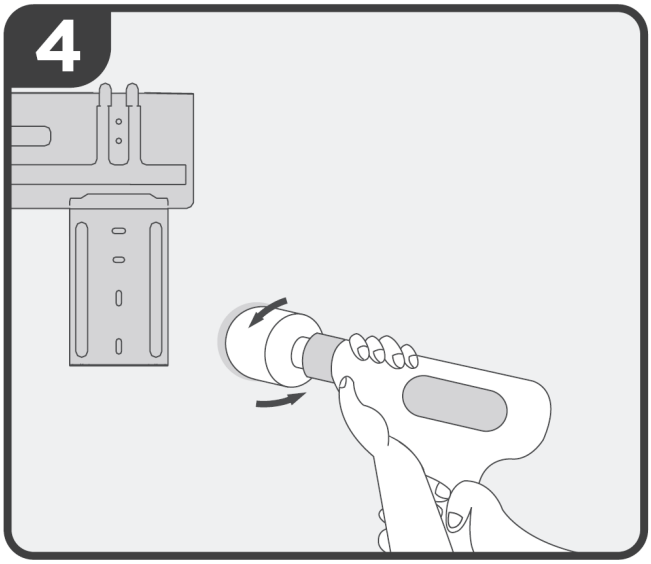

Drill wall hole

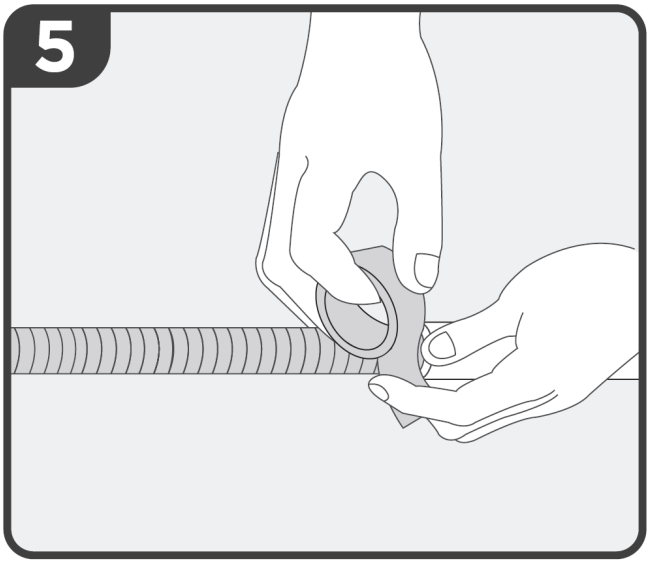

Prepare drain hose

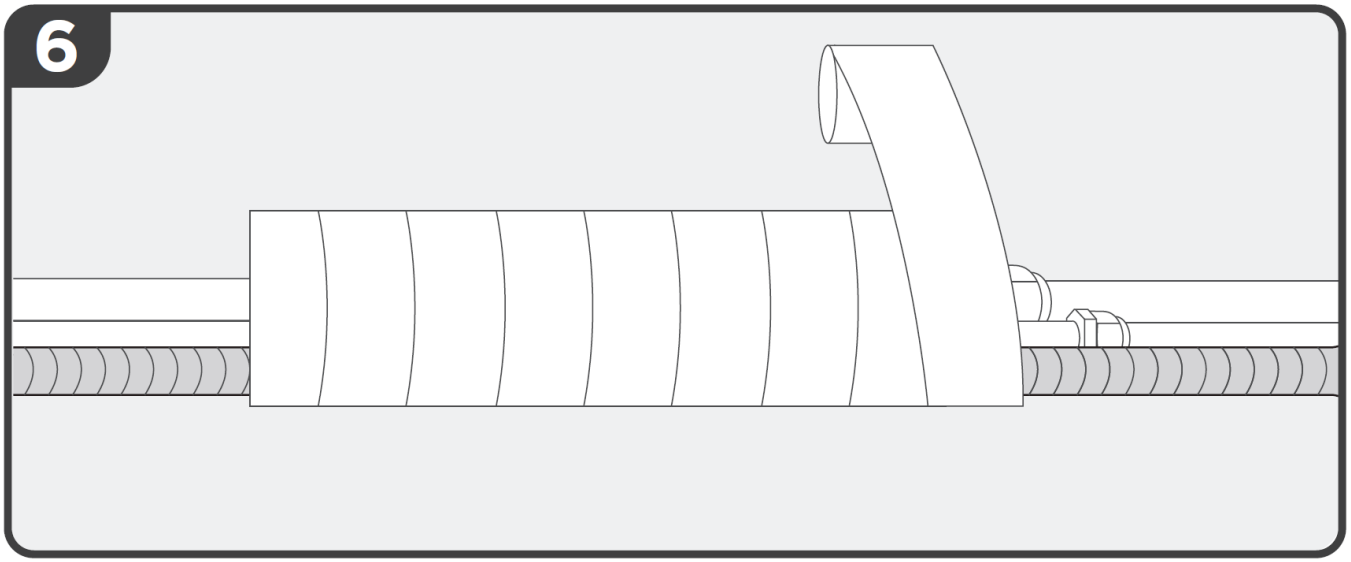

Wrap piping and drain hose

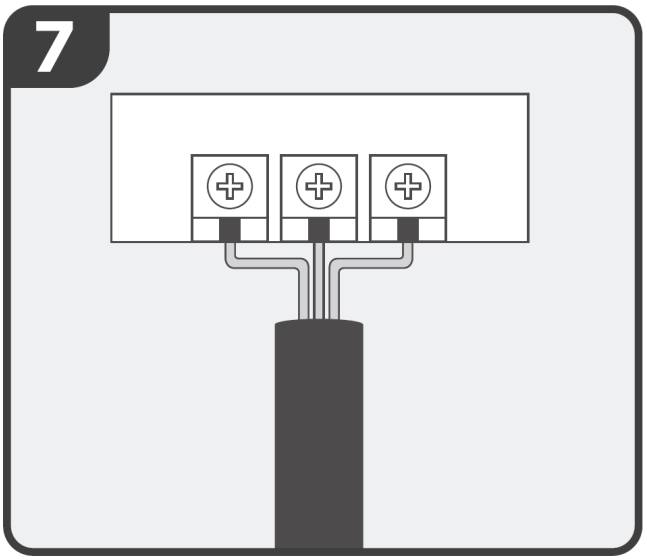

Connect Wiring

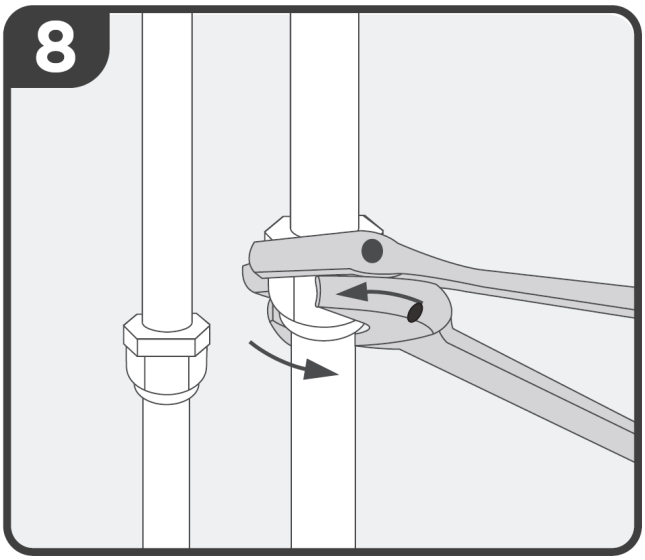

Connect Piping

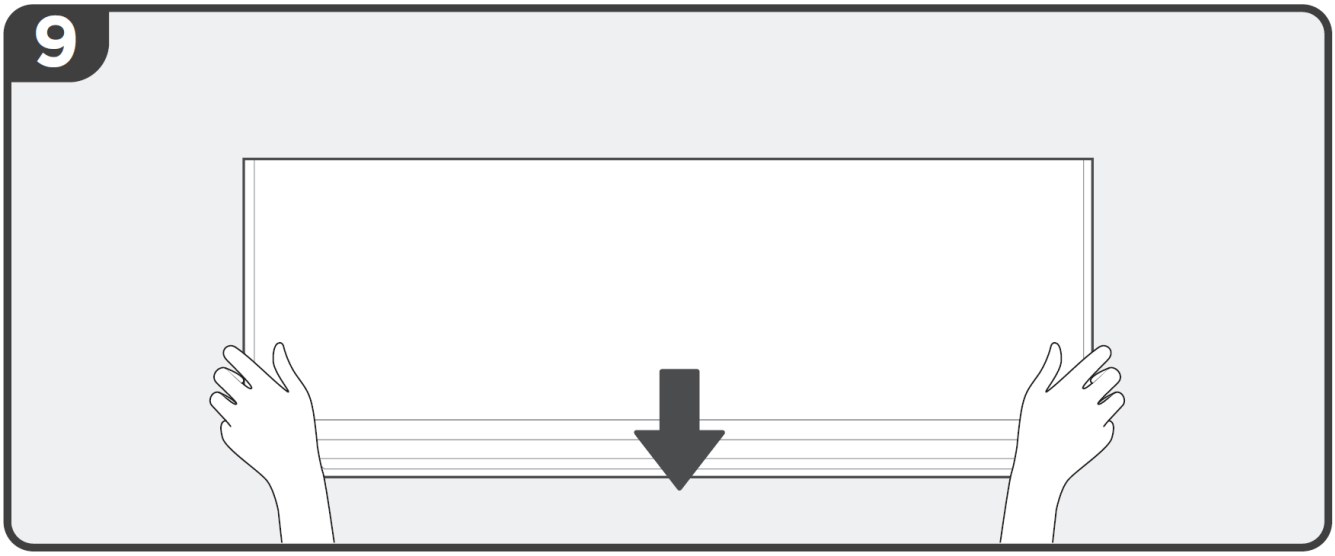

Mount Indoor Unit

3.3 Parts Overview

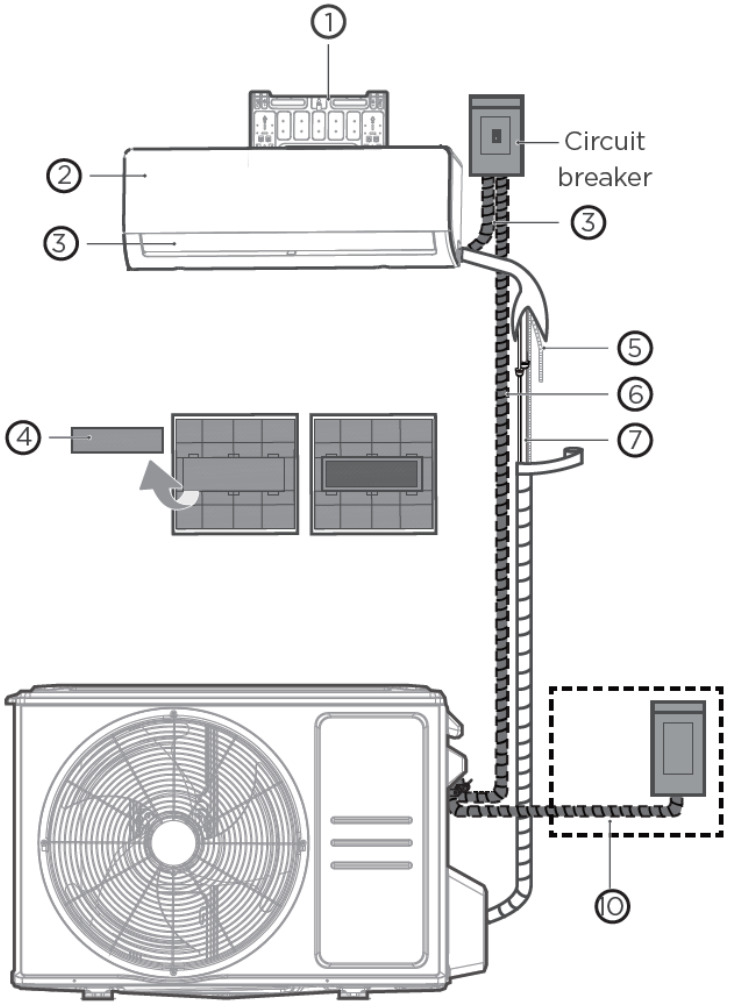

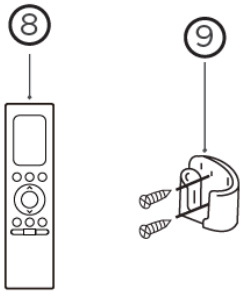

NOTE

Illustrations in this manual are for explanatory purposes. The actual shape of your unit may vary.

1. Wall Mounting Plate
2. Front Panel
3. Louver
4. Air Filter
5. Drain Pipe
6. Connection Cable
7. Refrigerant Piping
8. Remote Control
9. Remote Control Holder
10. Outdoor Unit Power Cable (Purchased Separately)

Optional Tools (Not Included):


Gloves


Screwdriver & Wrench

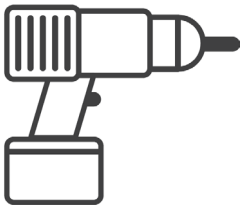
Hammer Drill

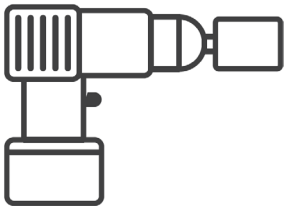
Core Drill


Goggles & Masks

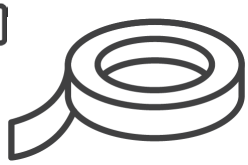
Vinyl Tape

4 FEATURES

4.1 Indoor Unit Display

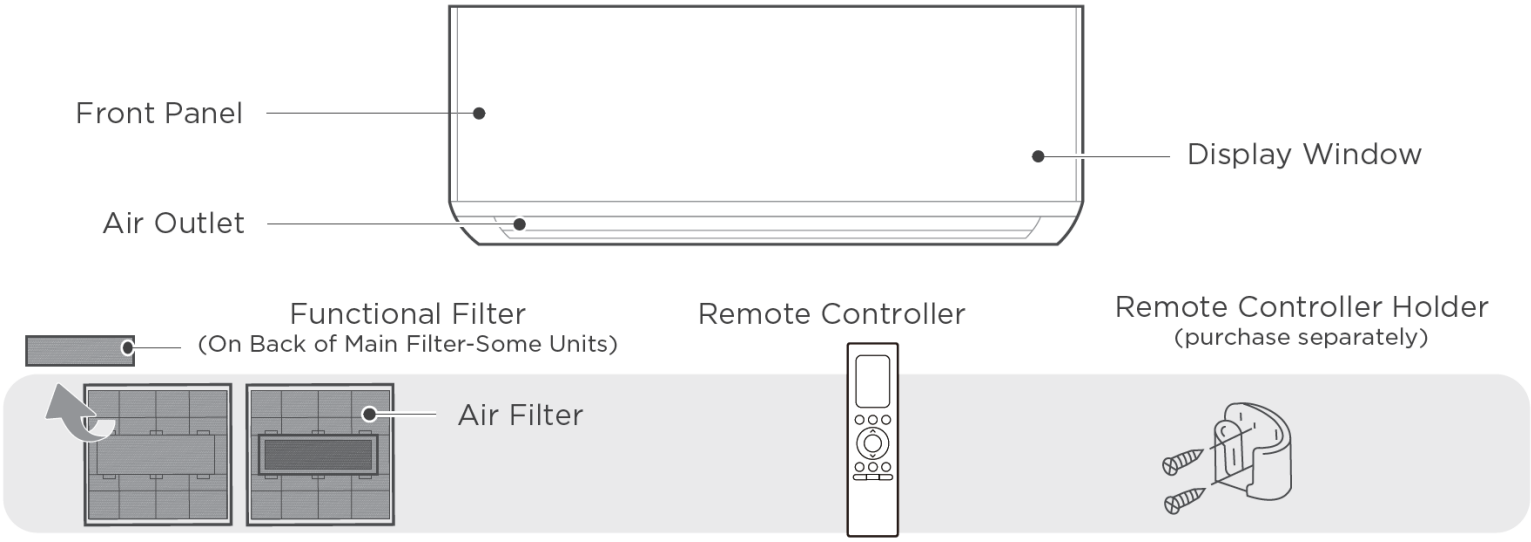

Display Window	88
Display Code	**Display Code Meanings**
	• When wireless control feature is activated. (For APP controlled units).
88	• Displays temperature, operation feature and ERROR codes.
on	• TIMER ON is set (if the unit is OFF, " on " remains on when TIMER ON is set). • SWING, TURBO, or SILENCE feature is turned on.
oF	• TIMER OFF is set. • SWING, TURBO, or SILENCE feature is turned off.
dF	• When defrosting.
CL	• When Active Clean feature is on.
FP	• When 46°F (8°C) heating feature is turned on.

NOTE

Illustrations in this manual are for explanatory purposes. The actual shape of your unit may slightly differ.

4.2 Additional Features

Note: When the unit is powered on, a buzzing sound will be heard to indicate that the unit has been powered on normally. If there is no sound, it is possible that there is a problem with the unit. If this happens, power off and then on again. Also, check the circuit. Check the indoor display and remote control for your unit. (See the Remote Controller Manual for more features.)

Auto-Restart

In the event that there is a power loss, the unit will automatically restart with the prior settings once power has been restored.

Breeze Away

This feature avoids airflow from blowing directly on the body. The louver will set to a 35°angle. The fan will adjust to continue to maintain a cool atmosphere in the room.

Wireless Control (For App controlled units)

Allows you to control your unit using your mobile phone and a wireless connection. For the USB device access, replacement, and maintenance operations must be carried out by an HVAC technician.

Active Clean function

The Active Clean Technology washes away dust when it adheres to the heat exchanger by automatically freezing and then rapidly thawing the frost. This operation is used to produce more condensed water to improve the cleaning effect, and the cold air will blow out. After cleaning, the internal wind wheel then keeps operating with hot air to blow-dry the evaporator, thus keeping the inside clean. When this function is turned on, the indoor unit display window appears “CL ”, after 20 to 45 minutes, the unit will turn off automatically and cancel the Active Clean function.

Louver Angle Memory

When turning on your unit, the louver will automatically resume its former angle.

Heat Exchanger Dust Removal Function

This feature helps keep the outdoor coil cleaner and may extend the duration between regular maintenance intervals depending on local conditions. When the unit is turned off, a 10 second delay occurs then the outdoor fan runs in reverse rotation for 70 seconds. This will blow off loose accumulated dust and debris.

Refrigerant Leakage Detection

When the system detects a malfunction of the refrigerant, the indoor unit will automatically display the following error codes:

- EL0C (System lacks refrigerant),
- EHC1 (Refrigerant sensor detects leakage),
- EHC2 (Working condition of the refrigerant sensor is out of range and leakage is detected),
- EHC3(Working condition of the refrigerant sensor is out of range), or
- ECC1 (Other indoor unit refrigerant sensor detects leakage (Multi-zone).

When “EHC1” or “EHC2” error occurs, the buzzer will continue to beep for 5 to 6 minutes before stopping. You can also press any button on the remote controller to stop the buzzer.

Note: Error codes of “EHC1”, “EHC2”,“EHC3” and “ECC1” are only applicable to the units with refrigerant sensor.

Sleep Operation

The SLEEP function is used to maximize energy usage while you sleep (and don’t need the same temperature settings to stay comfortable). When in COOL mode, press the SLEEP button on remote control. The unit will increase the temperature by 2°F (1°C) after 1 hour, and will increase an additional 2°F (1°C) after another hour. When in HEAT mode, the unit will decrease the temperature by 2°F (1°C) after 1 hour, and will decrease an additional 2°F (1°C) after another hour. The sleep feature will stop after 8 hours and the system will keep running with final temperature setting.

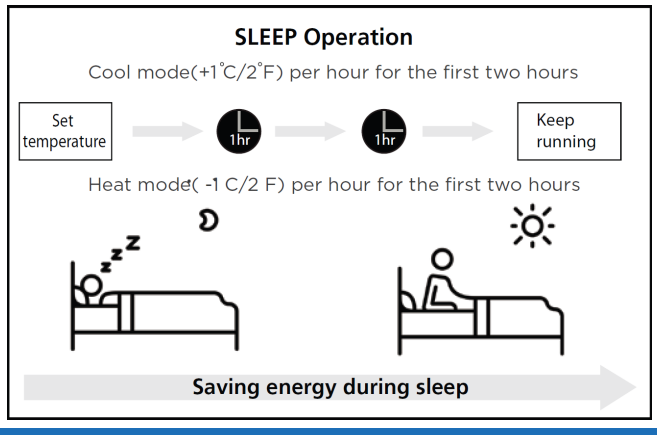

4.3 Setting Angle of Airflow

Note on Louver Angles

When using COOL of DRY mode, do not set louver at too vertical of an angle for long periods of time. This will cause the water to condense, which will result in water dripping below the unit.



When using COOL or HEAT mode, setting the louver at too small an angle can reduce the performance of the unit due to restricted air flow.

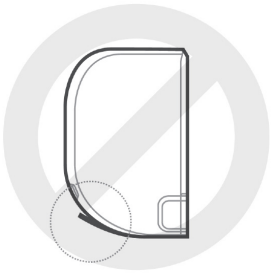

Set the vertical air flow louver to it's maximum angle according to the relative standards requirement under heating capacity test.

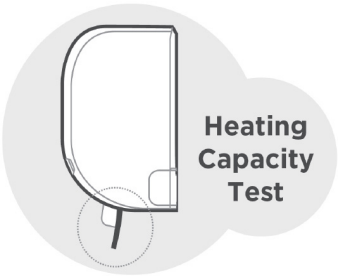

Note: Do not manually move the louver. To reset the louver, turn off the unit and disconnect from power.

Setting Horizontal Angle of Airflow

The horizontal angle of the airflow must be set manually. To adjust, grip the deflector rod and set it to the preferred position.

The horizontal angle of the airflow can also be set by remote control. (Refer to the Remote Control Manual for instructions.)

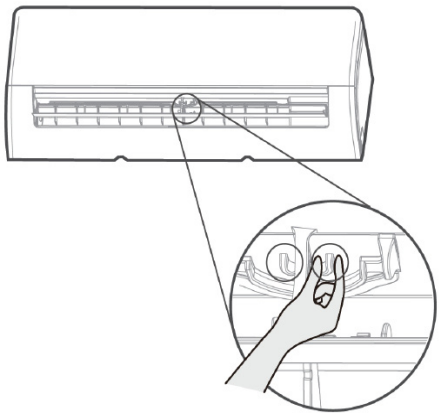

Deflector Rod

! CAUTION

DO NOT put your fingers in or near the blower and suction side of the unit. The high-speed fan inside the unit may cause injury.

4.4 Manual Operation

To Operate the Unit Manually:

1. Open the front panel of the air handler.

   Note: If there is a supporting rod located on the left or right side, use that to secure the panel.

2. Locate the MANUAL CONTROL button on the right-hand side of the unit.
3. Press the MANUAL CONTROL button one time to activate FORCED AUTO mode.
4. Press the MANUAL CONTROL button again to activate FORCED COOLING mode.
5. Press the MANUAL CONTROL button a third time to turn the unit off.
6. Release the supporting rod (if included), then close the front panel.

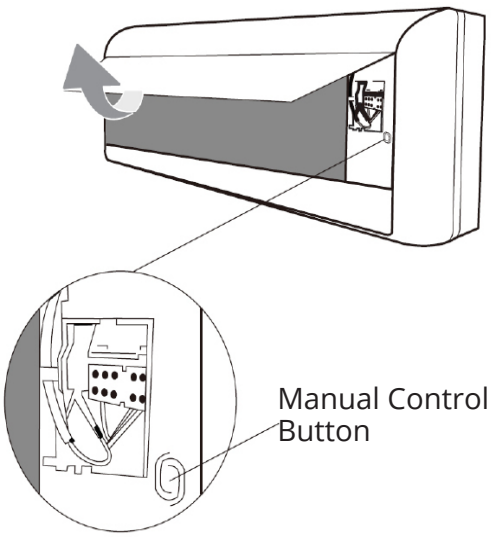

! CAUTION

The manual button is intended for testing purposes and emergency operation only. Please do not use this function unless the remote control is unavailable. To restore regular operation, use the remote control to activate the unit. The unit must be turned off before manual operation.

5.1 Select Installation Location

Note: Before you begin installation, refer to the label on the product box to make sure that the model number of the indoor unit matches the model number of the outdoor unit.
The following standards will help you choose an appropriate location for the unit. Proper installation must meet the following specifications:



☑ Good air circulation

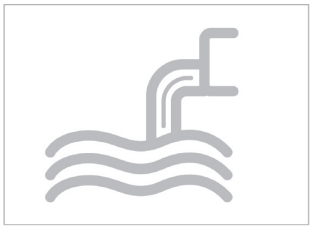

☑ Convenient drainage



☑ Noise from the unit will not disturb other people.



☑ Firm and solid—the location will not vibrate

☑ Strong enough to support the weight of the unit

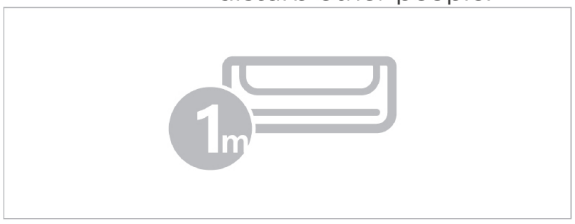

☑ A location at least one meter from all other electrical devices (e.g., TV, radio, computer)

Do NOT install the unit in the following locations:

- ⊘ Near any source of heat, steam, or combustible gas.
- ⊘ Near flammable items such as curtains or clothing.
- ⊘ Near any obstacle that might block air circulation.
- ⊘ Near a doorway.
- ⊘ In a location that is subject to direct sunlight.

Note: When choosing a location, be aware that you should leave ample room for a wall hole (see steps for drilling a wall hole for connecting piping) for the signal cable and refrigerant piping that connect the indoor and outdoor units. The default position for all piping is the right side of the indoor unit (when facing the unit).

5.2 Connective Piping Wall Hole

Step 1:

Remove the screw that attaches the mounting plate to the back of the indoor unit.

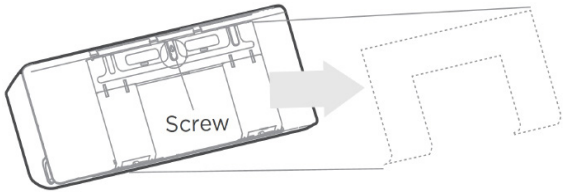

Step 2:

Secure the mounting plate to the wall with the screws provided. Make sure the mounting plate is flat against the wall

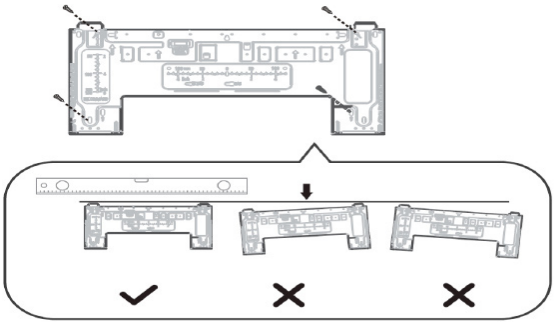

Correct orientation of mounting plate

Step 3:

Double-check the type of mounting plate. Determine the location of the wall hole based on the position of the mounting plate. The dotted rectangular box on the figure shows the correct size for your product.

9K

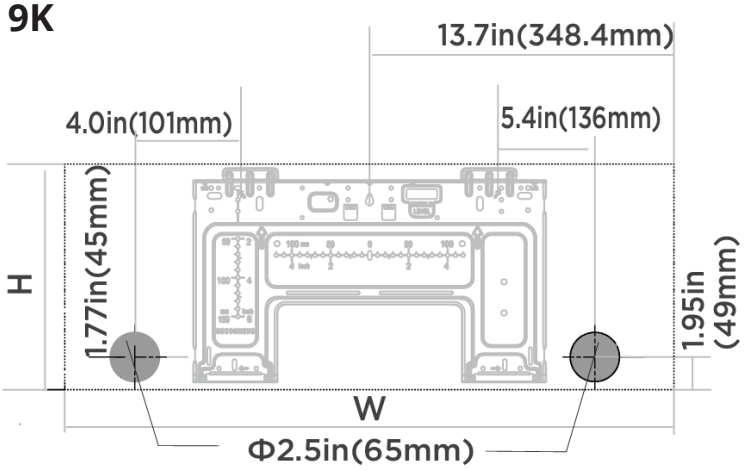

Indoor unit dimensions(WxH):
28.45in(722mm)x11.4in(290mm)

12K

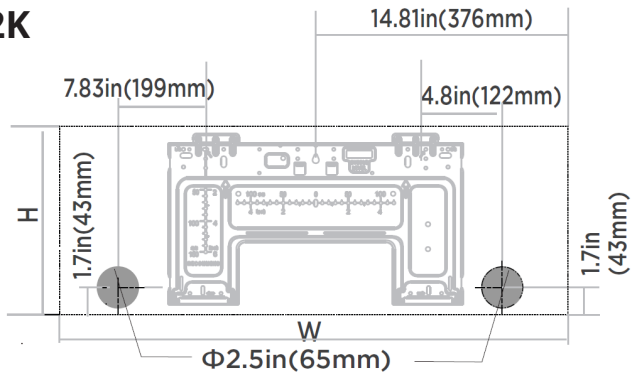

Indoor unit dimensions(WxH):
31.54in(802mm)x11.69in(297mm)

18K

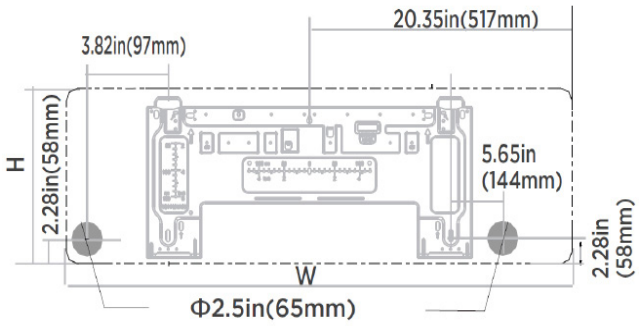

Indoor unit dimensions(WxH):
37.99in(965mm)x12.56in(319mm)

24K

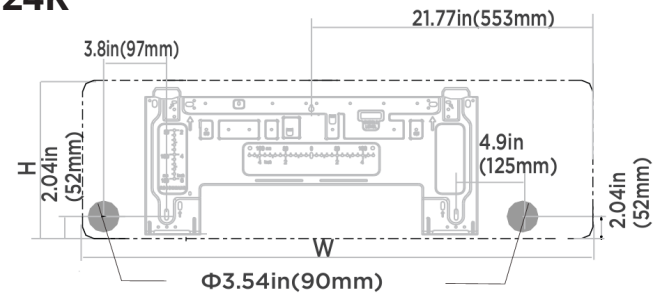

Indoor unit dimensions(WxH):
42.52in(1080mm)x13.19(335mm)

36K

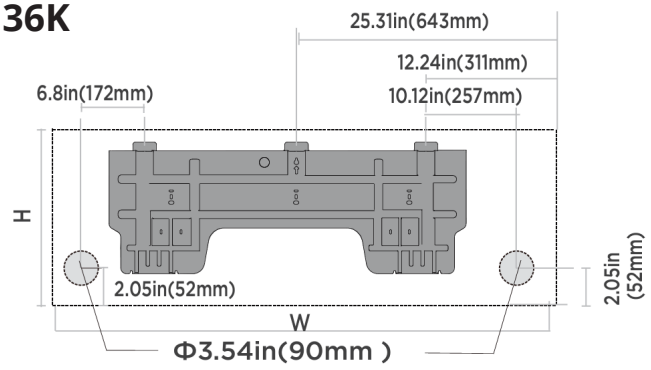

Indoor unit dimensions(WxH):
49.57in(1259mm)x14.25in(362mm)

Drill Wall Hole

CAUTION

When drilling the wall hole, avoid wires, plumbing, and other sensitive components.

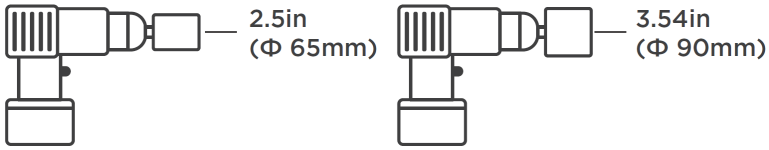

Use a 2.5in (65mm) or 3.54in(90mm) core drill (according to the unit you purchased).

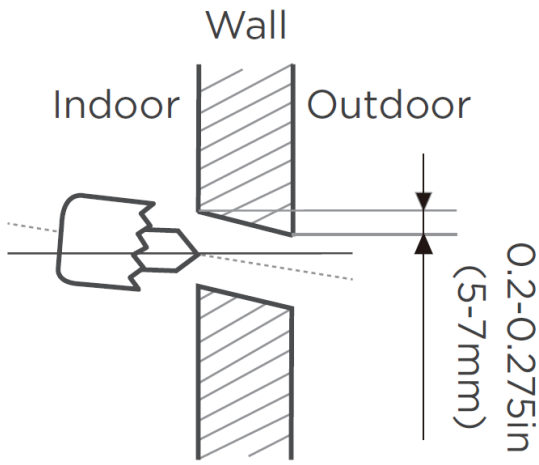

Drill the wall hole

Step 1:

Using a 2.5in (65mm) or 3.54in (90mm) core drill, drill a hole in the wall. Make sure that the hole is drilled at a slight downward angle, so that the outdoor end of the hole is lower than the indoor end by approximately 0.2-0.275in (5-7 mm). This will ensure proper drainage.

NOTE

For concrete or brick walls: If the wall is made of brick, concrete, or similar material, drill a 0.2in-diameter (5mm-diameter) holes in the wall and insert the sleeve anchors provided. Secure the mounting plate to the wall by tightening the screws directly into the clip anchors.

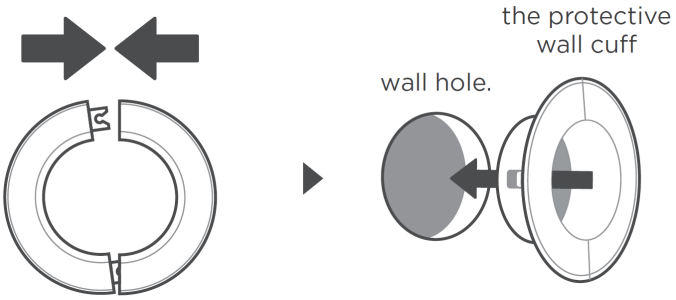

Place the protective wall cuff in the hole.

Step 2:

Place the protective wall cuff in the hole. This protects the edges of the hole and helps seal after the installation process is finished.

5.3 Refrigerant Piping & Drain Hose Preparation

NOTE

The refrigerant piping is inside an insulated sleeve attached to the back of the unit. You must prepare the piping before passing it through the hole in the wall.

Prepare Refrigerant Piping

Step 1:

Based on the position of the wall hole relative to the mounting plate, choose the side from which the piping will exit the unit (when you are facing the back of the unit.) You have four options for the exit direction of the piping. See below for detailed descriptions of the piping.

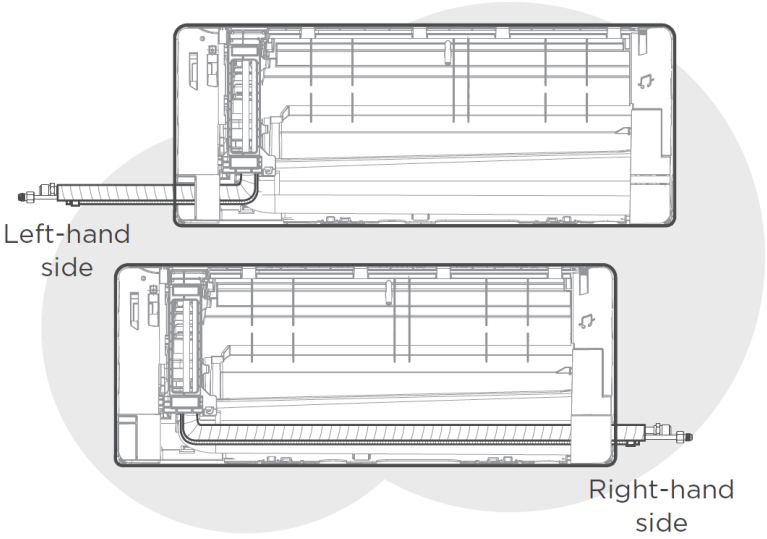

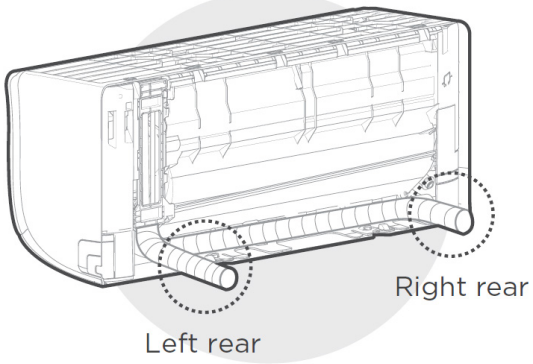

Step 2:

If the wall hole is behind the unit, keep the knock-out panel in place. If the wall hole is to the side of the indoor unit, remove the plastic knock-out panel from that side of the unit. Use scissors or pliers if the plastic panel is too difficult to remove by hand.

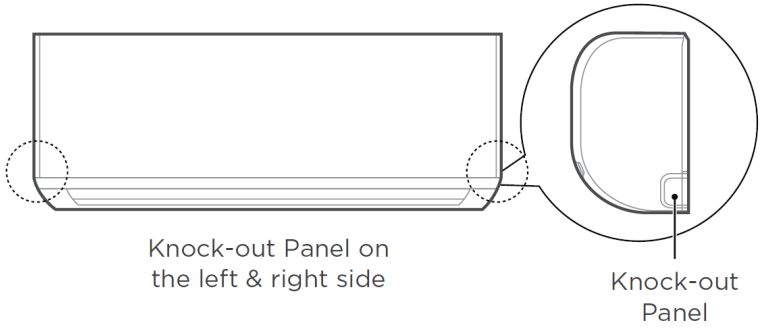

Step 3:

Connect the indoor unit's refrigerant piping to the connective piping that will join the indoor and outdoor units. Refer to the Refrigerant Piping Connection section of this manual for more detailed instructions.

NOTE

If existing connective piping is already embedded in the wall, proceed directly to the connect drain hose step.

! CAUTION

Be extremely careful not to dent or damage the piping while bending them away from the unit. Any dents in the piping will affect the unit's performance.

For R454B Refrigerant Charge Amount and Minimum Room Area

Check below for refrigerant guidance on your purchased unit. The indoor and outdoor units are designed to be used together. Please double check the machine you purchased. The indoor unit should be installed at least 6.0ft/1.8m above the floor; the height of the room cannot be less than 7.3ft/2.2m. The minimum room area of operating storage should be as specified in the following table:

A_{min} [ft²/m²]	h_{inst}[ft/m]					
m_c or m_{REL} [oz/kg]	6.0~7.3/1.8~2.2	7.6/2.3	7.9/2.4	8.6/2.6	9.2/2.8	9.9/3.0
<=62.6/1.776	12/1.10					
63.4/1.8	60/5.53	57/5.29	55/5.07	51/4.68	47/4.35	44/4.06
70.5/2.0	67/6.15	64/5.88	61/5.64	56/5.2	52/4.83	49/4.51
77.5/2.2	73/6.76	70/6.47	67/6.2	62/5.72	58/5.31	54/4.96
84.6/2.4	80/7.38	76/7.06	73/6.76	68/6.24	63/5.8	59/5.41
91.7/2.6	86/7.99	83/7.64	79/7.32	73/6.76	68/6.28	64/5.86
98.7/2.8	93/8.6	89/8.23	85/7.89	79/7.28	73/6.76	68/6.31
105.8/3.0	100/9.22	95/8.82	91/8.45	84/7.8	78/7.24	73/6.76
112.8/3.2	106/9.83	102/9.41	97/9.01	90/8.32	84/7.73	78/7.21
119.9/3.4	113/10.45	108/9.99	104/9.58	96/8.84	89/8.21	83/7.66
126.9/3.6	120/11.06	114/10.58	110/10.14	101/9.36	94/8.69	88/8.11
134.3.8	126/11.68	121/11.17	116/10.07	107/9.88	99/9.17	93/8.56
141.1/4.0	133/12.29	127/11.76	122/11.27	112/10.4	104/9.66	67/9.01
148.1/4.2	139/12.9	133/12.34	128/11.83	118.10.92	110/10.14	102/9.46
155.1/4.4	146/13.52	140/12.93	134/12.39	124/11.44	115/10.62	107/9.91
162.2/4.6	153/14.13	146/13.52	104/12.96	129/11.96	120/11.11	112/10.37
169.2/4.8	159/14.75	152/14.11	146/13.52	135/12.48	125/11.59	117/10.82
176.3/5.0	166/15.36	159/14.69	152/14.08	140/13	130/12.07	122/11.27

Area Formula:

A_{min} is the required minimum room area in ft²/m²

m_c is the actual refrigerant charge in the system in oz/kg

m_{REL} is the refrigerant releasable charge in oz/kg (Applicable to the units with refrigerant sensors only)

h_{inst} is the height of the bottom of the appliance relative to the floor of the room after installation.

WARNING

The minimum room area or minimum room area of conditioned space is based on releasable charge and total system refrigerant charge.

When the unit detects a refrigerant leak, the minimum airflow of the indoor unit is as follows:

Entry Tier Series

Model	Indoor Unit	Outdoor Unit	Indoor Nominal Air Volume	
09K (115V)	A-09-HP-WMAH-115D-O	A-09-HP-C-115D-O	400m³/h	235CFM
09K	A-09-HP-WMAH-230D-O	A-09-HP-C-230D-O	450m³/h	265CFM
12K (115V)	A-12-HP-WMAH-115D-O	A-12-HP-C-115D-O	525m³/h	310CFM
12K	A-12-HP-WMAH-230D-O	A-12-HP-C-230D-O	540m³/h	320CFM
18K	A-18-HP-WMAH-230D-O	A-18-HP-C-230D-O	660m³/h	390CFM
24K	A-24-HP-WMAH-230D-O	A-24-HP-C-230D-O	900m³/h	530CFM
36K	A-36-HP-WMAH-230D-O	A-36-HP-C-230D-O	1245m³/h	730CFM

Connect Drain Hose

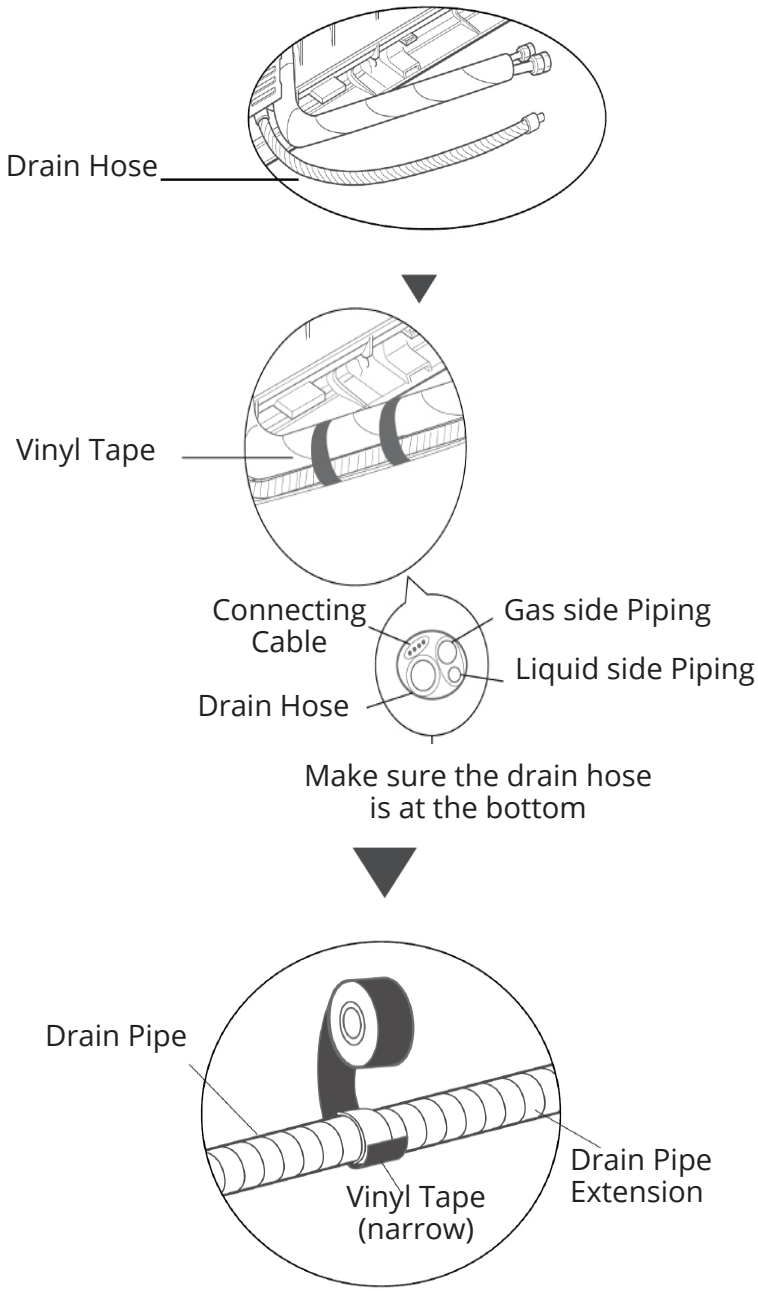

Step 1:

The drain hose can be attached to the left or right side. To ensure proper drainage, attach the drain hose to on the same side that the refrigerant piping exits the unit. Attach the drain hose extension (purchased separately) to the end of the drain hose.

- Wrap the connection point firmly with Teflon tape to ensure a good seal and to prevent leaks.
- For the portion of the drain hose that will remain indoors, wrap with foam pipe insulation to prevent condensation.
- Remove the air filter and pour a small amount of water into the drain pan to make sure that water flows smoothly from the unit.

NOTE

Make sure to arrange the drain hose according to the following diagrams.

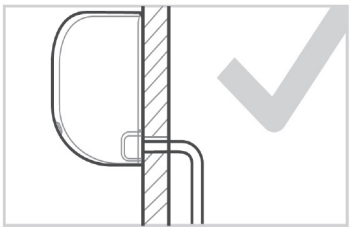

CORRECT
Make sure there are no kinks or dent in drain hose to ensure proper drainage.

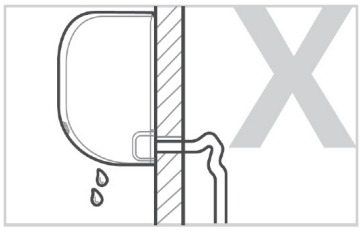

NOT CORRECT
Kinks in the drain hose will create water traps.

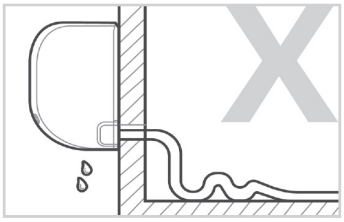

NOT CORRECT
Kinks in the drain hose will create water traps.

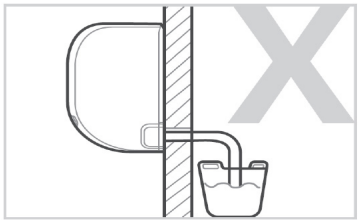

NOT CORRECT
Do not place the end of the drain hose in water or in containers that collect water. This will prevent proper drainage.

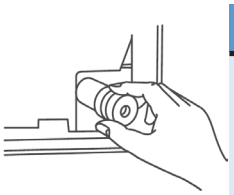

CAUTION

Plug the Unused Drill Hole: To prevent unwanted leaks, you must plug the unused drain hole with the rubber plug provided.

5.4 Electrical Work Preparation

WARNING

BEFORE PERFORMING ANY ELECTRICAL OR WIRING WORK, TURN OFF THE MAIN POWER TO THE SYSTEM.

1. All wiring must comply with local electrical codes, regulations, and must be installed by a licensed electrician.
2. All electrical connections must be made according to the Electrical Connection Diagram located on the panels of the indoor and outdoor units.
3. If there is a serious safety issue with the power supply, stop work immediately. Explain your reasoning to the client, and refuse to install the unit until the safety issue is resolved.
4. If connecting power to fixed wiring, a surge protector and main power switch must be installed.
5. Only connect the unit to an individual branch circuit outlet. Do not connect another appliance to that outlet.
6. Make sure to properly ground the unit.
7. Every wire must be firmly connected. Loose wiring can cause the terminal to overheat, resulting in product malfunction and possible fire.
8. Do not let wires touch or rest against refrigerant tubing, the compressor, or any moving parts within the unit.
9. To avoid getting an electrical shock, never touch the electrical components soon after the power supply has been turned off. After turning off the power, always wait 10 minutes or more before you touch the electrical components.

WARNING

All wiring must be performed strictly in accordance with the wiring diagram located on the back of the indoor unit's front panel.

Connect Signal and Power Cables

The signal cable enables communication between the indoor and outdoor units. You must first choose the correct cable size before preparing it for connection.

Note: Choose the cable type according to the local electrical codes and regulations. Choose the correct cable size according to the Minimum Circuit Ampacity indicated on the nameplate of the unit.

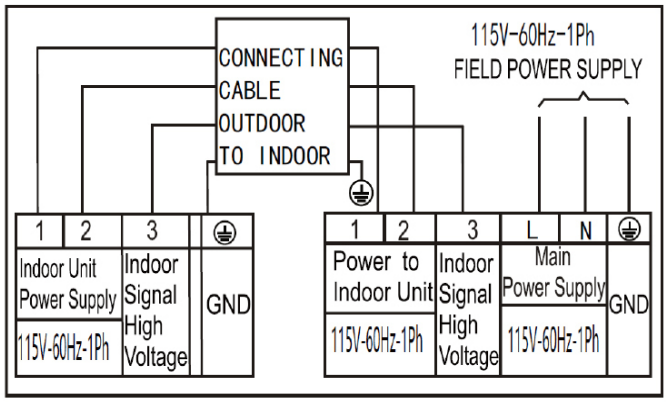

Connection Diagram (115V)

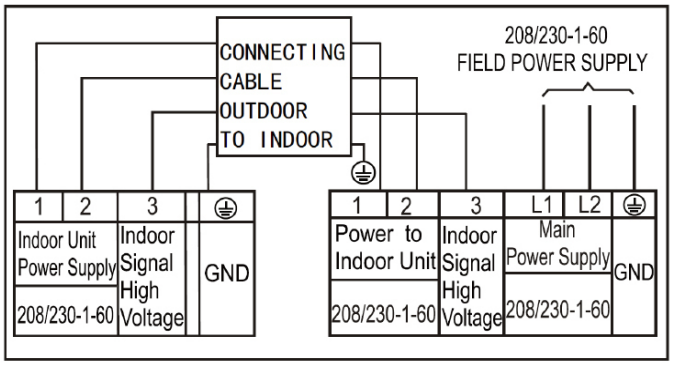

Connection Diagram (208/230V)

1. Open the front panel of the indoor unit.
2. Using a screwdriver, open the wire box cover on the right side of the unit. This will reveal the terminal block.
3. Facing the back of the unit, remove the big plastic knock-out panel to create a slot through which the conduit tube can be installed.

   Note: For the units with five-core cable, remove the middle small plastic knock-out panel to create a slot through which the cable can exit. Use needle nose pliers if the plastic panel is too difficult to remove by hand.
4. As shown in the illustration, inert the wires including the ground wire into the conduit and secure them with a lock nut onto the conduit mounting plate.
5. Match wire colors with terminal numbers on both indoor and outdoor unit terminal blocks and firmly screw wires to the corresponding terminals.
6. Pull the wires and check that the wires are securely fixed to the terminal block.

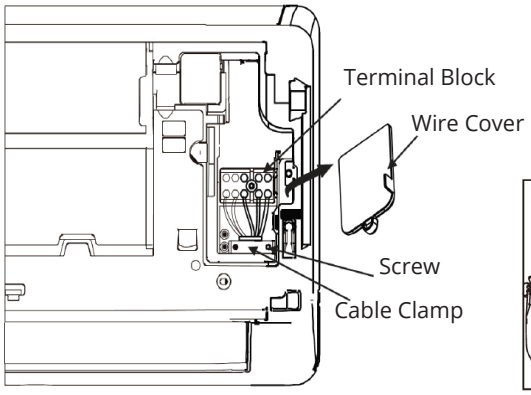

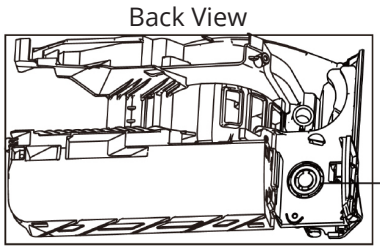

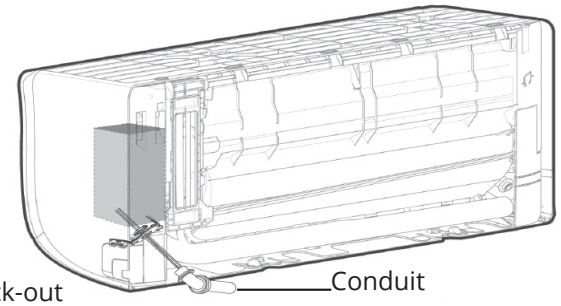

WARNING

DO NOT MIX UP LIVE AND NULL WIRES. THIS IS DANGEROUS AND CAN CAUSE THE UNIT TO MALFUNCTION.

5.5 Wrap Piping & Wires

NOTE

Before passing the piping, and drain hose through the wall hole, you must bundle them together to save space, protect, and insulate them.

Step 1:

Bundle the drain hose, refrigerant pipes as shown.

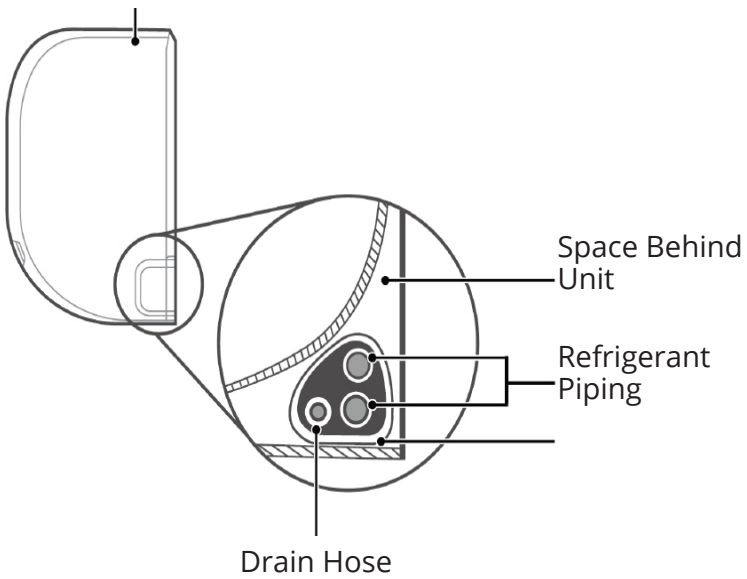

Step 2:

Using adhesive vinyl tape, attach the drain hose to the underside of the refrigerant pipes.

Step 3:

Using insulation tape, wrap the refrigerant pipes and drain hose tightly together. Double-check that all items are bundled.

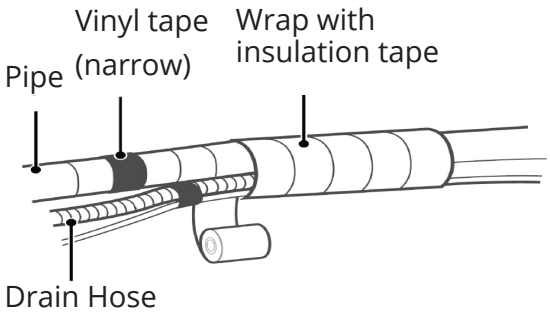

5.6 Mount Indoor Unit

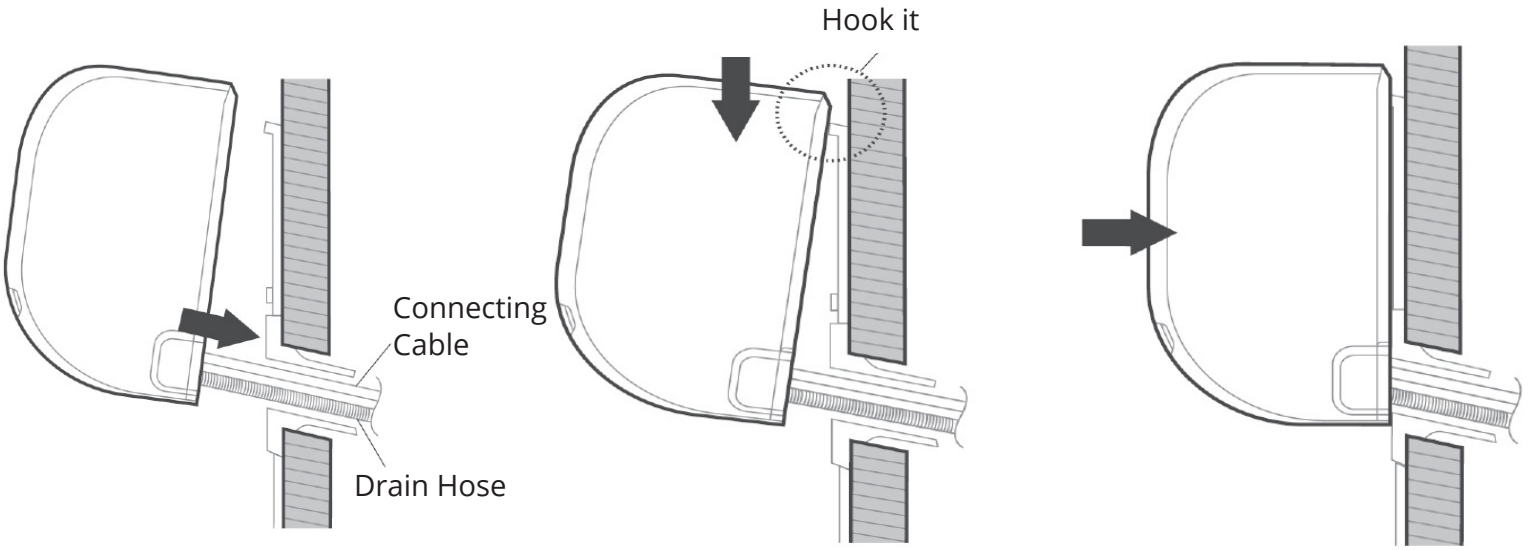

Put pipes in the wall hole

Hook it and press down lightly to secure

Check that the unit is firmly mounted

If you have installed new connective piping to the outdoor unit, do the following:

1. If you have already passed the refrigerant piping through the hole in the wall, proceed to Step 4.
2. Otherwise, double-check that th ends of the refrigerant pipes are sealed to prevent dirt or foreign materials from entering the pipes.
3. Slowly pass the wrapped bundle of refrigerant pipes, drain hose, and signal wire through the hole in the wall.
4. Hook the top of the indoor unit on the upper hook of the mounting plate.
5. Check that the unit is hooked firmly on the mounting by applying slight pressure to the left and right-hand sides of the unit. The unit should not jiggle or shift.
6. Using even pressure, push down on the bottom half of the unit. Keep pushing down until the unit snaps onto the hooks along the bottom of the mounting plate.
7. Again, check that the unit is firmly mounted by applying slight pressure to the left and the right-hand sides of the unit.

DRAIN HOSE MUST BE ON BOTTOM

Make sure that the drain hose is at the bottom of the bundle. Putting the drain hose at the top of the bundle can cause the drain pan to overflow, which can lead to fire or water damage.

DO NOT WRAP ENDS OF PIPING

When wrapping the bundle, keep the ends of the piping unwrapped. You need to access them to test for leaks at the end of the installation process (refer to the Electrical Checks and Leak Checks section of this manual).

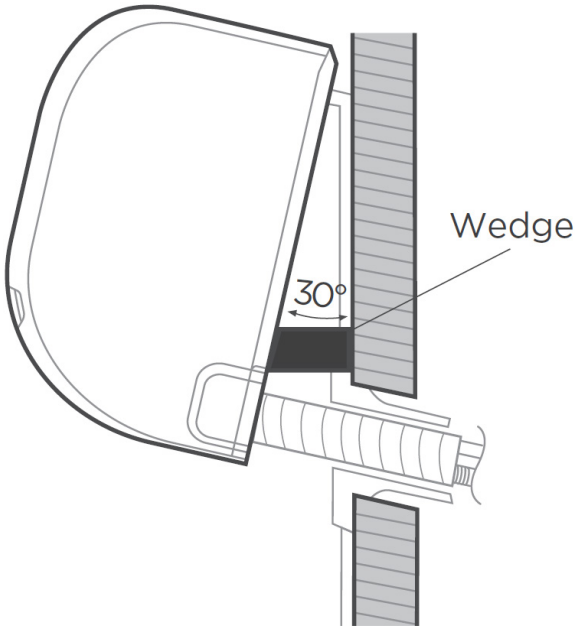

If refrigerant piping is already embedded in the wall, do the following:

- Hook the top of the indoor unit on the upper hook of the mounting plate.
- Use a bracket or wedge to prop up the unit, giving you enough room to connect the refrigerant piping, signal cable, and drain hose.
- Connect drain hose and refrigerant piping (refer to Refrigerant Piping Connection section of this manual for instructions.)
- Keep pipe connection point exposed to perform the leak test (refer to Electrical Checks and Leaks Checks section of this manual).
- After the leak test, wrap the connection point with insulation tape.
- Remove the bracket or wedge that is propping up the unit.
- Using even pressure, push down on the bottom half of the unit. Keep pushing down until the unit snaps onto the hooks along the bottom of the mounting plate.

NOTE: UNIT IS ADJUSTABLE

Keep in mind that the hooks on the mounting plate are smaller than the holes on the back of the unit. If you find that you don't have ample room to connect embedded pipes to the indoor unit, the unit can be adjusted left or right by approximately 1.18-1.96in (30-50mm), depending on the model.



Move to left or right

! CAUTION

For the units that have the following pipe connectors, strictly perform the piping work according to the following instructions:

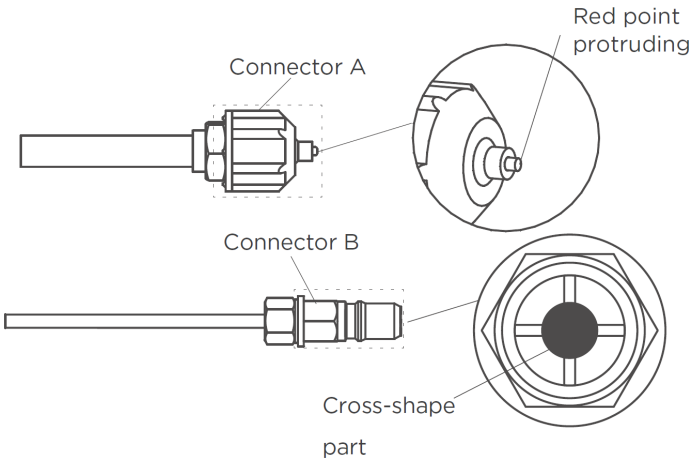

- Before connecting the refrigerant piping, always wear work gloves and goggles, and remember that the connectors A and B are not allowed to directly face the person.
- Keep pressing the cross-shape part of the connector B with a tool for about 5-10 seconds until the red protruding point of connector A retracts completely.
- Remove connectors A and B, then perform the refrigerant piping connection between the indoor and outdoor unit.

6 OUTDOOR UNIT INSTALLATION

6.1 Select Installation Location

NOTE: PRIOR TO INSTALLATION

Before installing the outdoor unit, you must choose an appropriate location. The following are guidelines that will help you choose an appropriate location for the unit.

Proper Installation Guidelines:

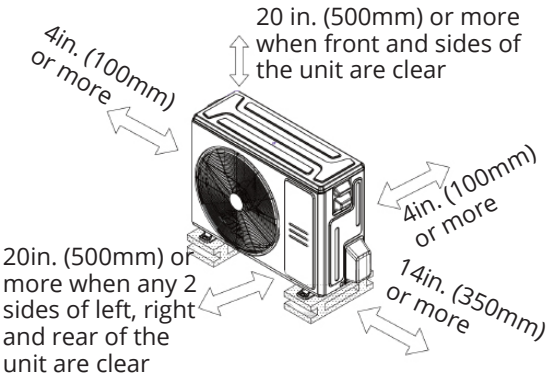

Meets all spatial requirements shown in installation Space Requirements above.

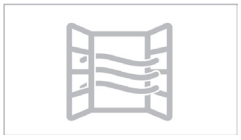

Good air circulation and ventilation.



Firm and solid- the location can support the unit and will not vibrate.



Noise from the unit will not disturb other people.



Protected from prolonged periods of direct sunlight or rain.



Where snowfall is anticipated, take appropriate measures to prevent ice buildup and coil damage.

NOTE

Install the unit according to local codes and regulations, this may differ according to regional location.

! CAUTION

Special Considerations for Extreme Weather
If the unit is exposed to heavy wind:
Install the unit so that air outlet fan is at a 90% angle to the direction of the wind. If needed, build a barrier in front of the unit to protect it from extremely heavy winds.
If the unit is frequently exposed to heavy rain or snow:
Build a shelter above the unit to protect it from rain or snow. Be careful not to obstruct air flow around the unit.
If the unit is frequently exposed to salty air (seaside):
Use outdoor unit that is specially designed to resist corrosion.

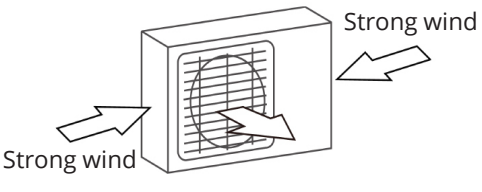

90° angle to the direction of the wind

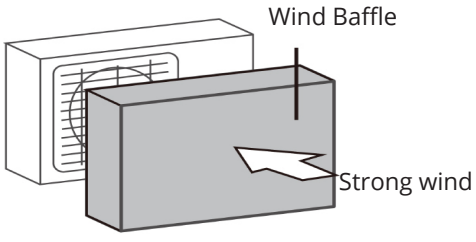

Build a wind Baffle to protect the unit

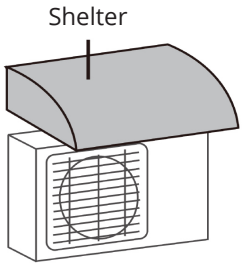

Build a shelter to protect the unit

DO NOT install the unit in the following locations:

- Near an obstacle that will block air inlets and outlets.
- Near a public street, crowded areas, or where noise from the unit will disturb others.
- Near animals or plants that will be harmed by hot air discharge.
- Near any course of combustible gas.
- In a location that is exposed to large amounts of dust.
- In a location exposed to an excessive amount of salty air.

6.2 Drain Joint Installation

NOTE: PRIOR TO INSTALLATION

Before bolting the outdoor unit in place, you must install the drain joint at the bottom of the unit. For the units with the base pan built-in with multiple holes for proper drainage during defrost, the drain joint does not need to be installed.

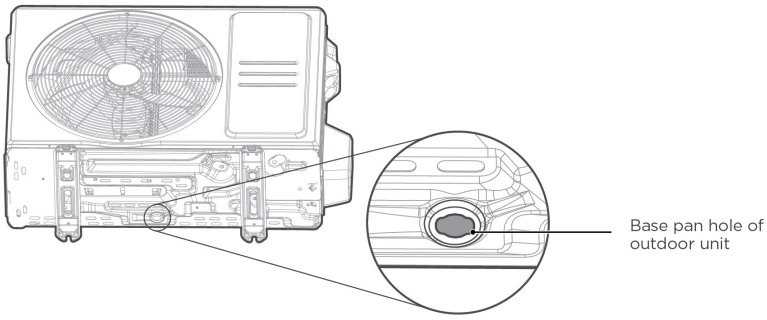

Step 1:
Find the base pan hole of the outdoor unit.

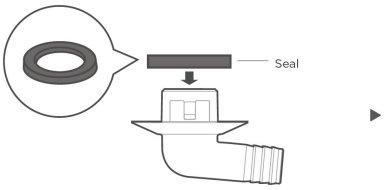

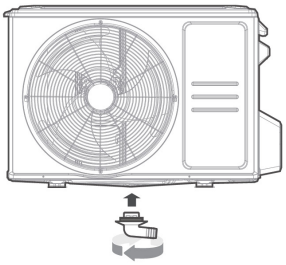

Step 2:

1. Fit the rubber seal on the end of the drain joint that connects to the outdoor unit.
2. Insert the drain joint into the hole in the base pan of the unit. The drain joint will click in place.
3. Connect a drain hose extension (sold separately) to the drain joint to redirect water from the unit during heating mode.

NOTE: FOR COLDER CLIMATES

In colder climates, make sure that the drain hose is as vertical as possible to ensure swift water drainage. If water drains too slowly, it can freeze inside the hose and flood the unit.

6.3 Anchoring of Unit

The outdoor unit can be anchored to the ground or to a wall-mounted bracket with bolt (M10). Prepare the installation base of the unit according to the dimensions below. The following list contains outdoor unit sizes and the distance between their mounting feet. Prepare the installation base of the unit according to the dimensions below.

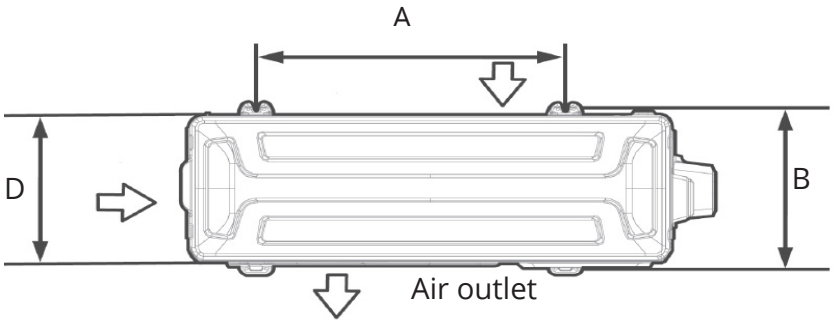

Top view

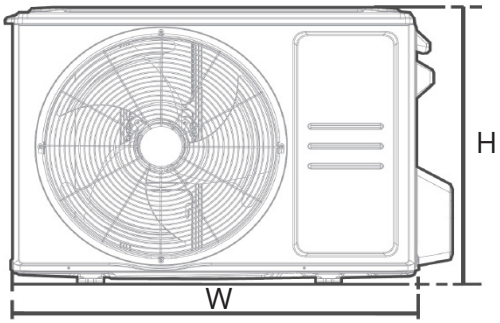

Front View

Outdoor Unit Dimensions WxHxD	Mounting Dimensions	
	Distance A	Distance B
30.1inx21.8inx11.9 (765mmx555mx303mm)	17.8in (452mm)	11.3in (286mm)
31.7inx21.8inx12.9in (805x554mmx330mm)	20.1in (511mm)	12.5in (317mm)
35.0inx26.5inx13.5in (890mmx673mmx342mm)	26.1in (663mm)	13.9in (354mm)
37.2inx31.9in16.1in (946mmx810mmx410mm)	26.5in (673mm)	15.9in (403mm)

If the unit is installed on the ground or a concrete mounting platform, do the following:

1. Mark the positions for four expansion bolts based on the dimensions chart.
2. Pre-drill holes for expansion bolts.
3. Place a nut on the end of each expansion bolt.
4. Hammer expansion bolts into the pre-drilled holes.
5. Remove the nuts from expansion bolts, and place outdoor unit on bolts.
6. Place washer on each expansions bolt, then replace the nuts.
7. Using a wrench, tighten each nut until snug.

If the unit is installed on a wall-mounted bracket, do the following:

1. Mark the positions of bracket holes based on dimensions chart.
2. Pre-drill the holes for the expansion bolts.
3. Place a washer and nut on the end of each expansion bolt.
4. Thread expansion bolts through holes in mounting brackets, place mounting brackets into position, then hammer expansion bolts into the wall.
5. Check that the mounting brackets are level.
6. Carefully lift unit and place the mounting feet onto the brackets.
7. Bolt the unit firmly to the brackets.
8. If allowed, install the unit with rubber gaskets to reduce vibrations and noise.

⚠ WARNING

When drilling into concrete, EYE PROTECTION IS RECOMMENDED AT ALL TIMES.
Make sure that the wall is made of solid brick, concrete or of similarly strong material. The wall must be able to support at least four times the weight of the unit.

6.4 Signal & Power Cable Connection

WARNING - RISK OF ELECTRIC SHOCK

All wiring must be performed strictly in accordance with the wiring diagram located inside of the wire cover of the outdoor unit. Before performing any electrical wiring work, Turn off the main power to the system.

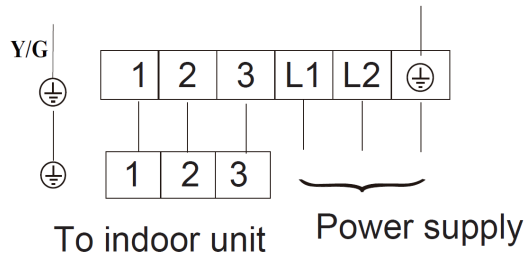

For 208/230V models

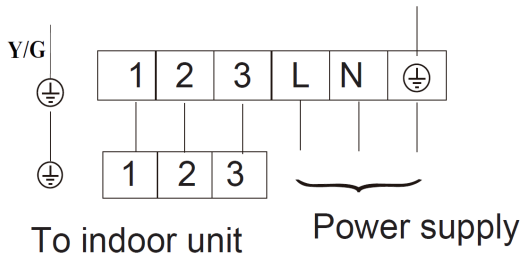

For 115V models

The outside unit's terminal block is protected by an electrical wiring cover on the side of the unit. A comprehensive wiring diagram is printed on the inside of the wiring cover.

1. Remove the wire cover from the unit by loosening 3 screws.
2. Dismount caps on the conduit panel.
3. Temporarily mount the conduit tubes (sold separately) on the conduit panel.
4. Properly connect both the power supply and low voltage lines to the corresponding terminals on the terminal block.
5. Ground the unit in accordance with local codes.
6. Be sure to size each wire allowing several inches longer than the required length for wiring.
7. Use lock nuts to secure the conduit tubes.

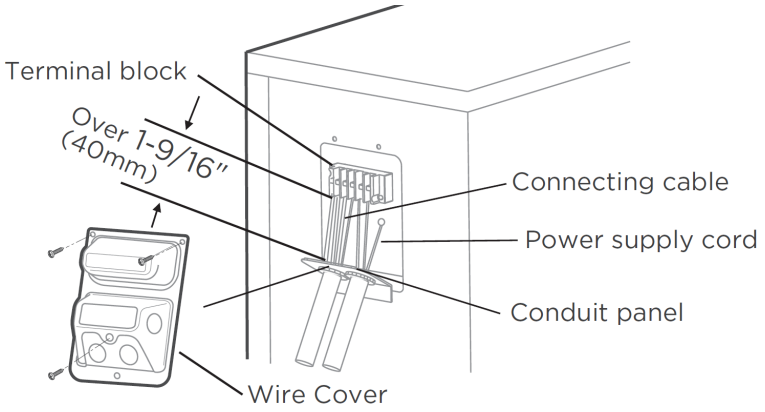

Please select the appropriate through-hole according to the diameter of the wire.

How to Properly Connect the Wires:

Step 1:

The treatment at the end of the wire.

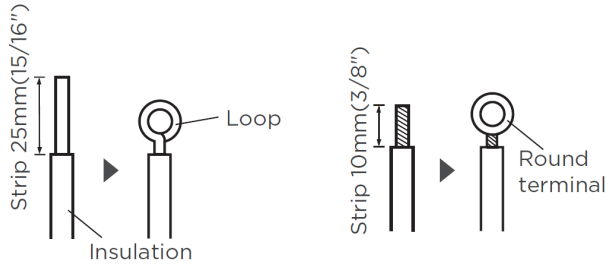

Step 2:

Connect the line to the corresponding terminals on the terminal block.

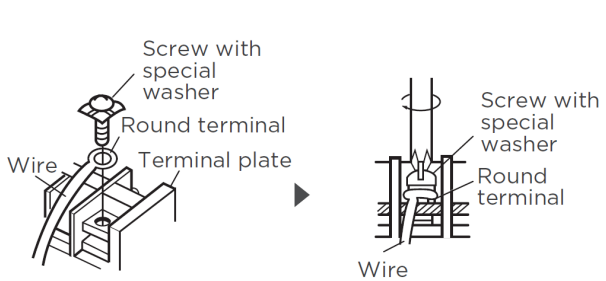

7 REFRIGERANT PIPING CONNECTION

7.1 Pipe Connection Precautions

Note on Pipe Length:

The length of refrigerant piping will affect the performance and energy efficiency of the unit. Nominal efficiency is tested on units with a pipe length of 25ft (7.5m). A minimum pipe run of 9.84ft (3m) is required to minimize vibration and excessive noise. Connection instructions for Refrigerant Piping.

The maximum length and drop height based on models.

Model	Length of Piping	Maximum Drop Height
9K/12K	82ft/25m	49.2ft/15m
18K	98.4ft/30m	65.6ft/30m
24K/30K	164ft/50m	82ft/25m
36K	164ft/50m	98.4ft/30m

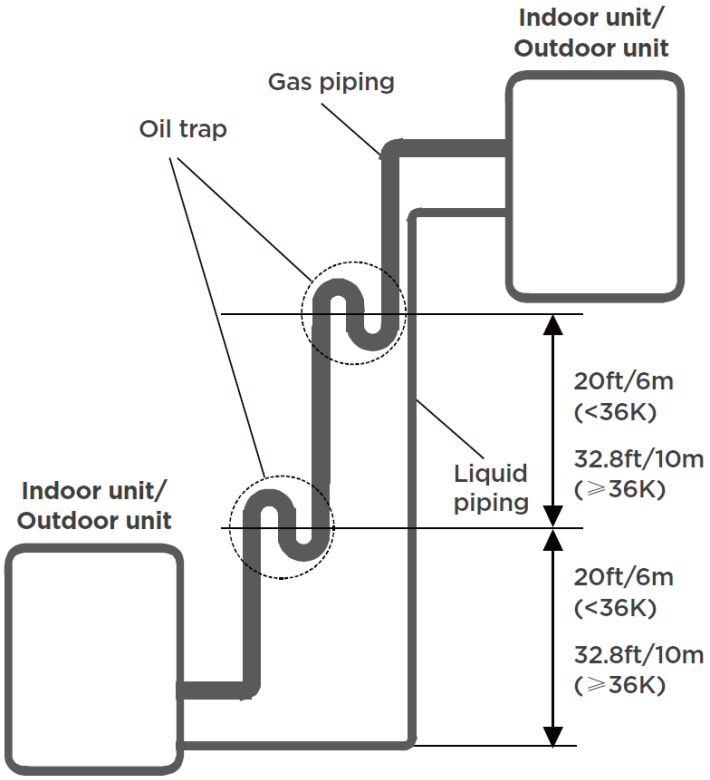

CAUTION

Use of Oil Traps

If oil flows into the outdoor unit's compressor, this may cause liquid compression or deteriorating oil return. Oil traps in the rising gas piping can prevent this. An oil trap should be installed every 20ft(6m) of vertical suction line riser (<36K). An oil trap should be installed every 32.8ft (10m) of vertical suction line riser. (>36K)

Connection Instructions for Refrigerant Piping:

Step 1: Cut Pipes

When preparing refrigerant pipes, take extra care to cut and flare them properly. This will ensure efficient operation and minimize the need for future maintenance.

1. Measure the distance between indoor and outdoor units.
2. Using a pipe cutter, cut the pipe a little longer than the measured distance.
3. Make sure that the pipe is cut at a perfect 90° angle.

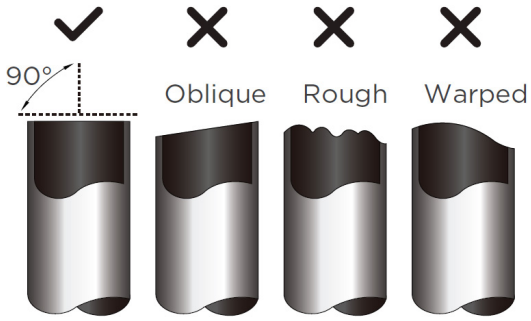

WARNING

WHEN CONNECTING REFRIGERANT PIPING, DO NOT LET SUBSTANCES OR GASES OTHER THAN THE SPECIFIED REFRIGERANT ENTER THE UNIT. THE PRESENCE OF OTHER GASES OR SUBSTANCES WILL LOWER THE UNITS CAPACITY, AND CAN CAUSE ABNORMALLY HIGH PRESSURE IN THE REFRIGERATION CYCLE. THIS CAN CAUSE EXPLOSION AND INJURY.

DO NOT DEFORM PIPE WHILE CUTTING

Take extra precautions to not damage or deform the pipe while cutting. This will drastically reduce the heating efficiency of the unit.

⚠ CAUTION

Check over the end of the pipe for cracks and even flaring. Ensure that the pipe is sealed.

Step 2: Remove Burrs

Burrs can affect the air-tight seal of refrigerant piping connection. They must be completely removed.

1. Hold the pipe at a downward angle to prevent burrs from falling into the pipe.
2. Using a reamer or deburring tool, remove all burrs from the cut section of the pipe.

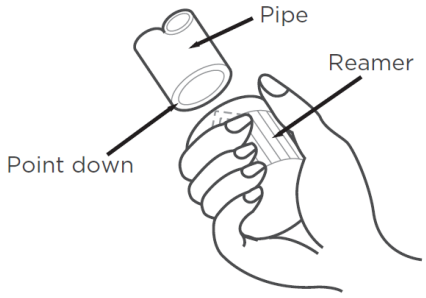

Step 3: Flare Pipe Ends

Proper flaring is essential to achieve an airtight seal.

1. After removing burrs from the cut pipe, seal the ends with PVC tape to prevent foreign materials from entering the pipe.
2. Sheath the pipe with insulating material.
3. Place flare nuts on both ends of the pipe. Make sure they are facing in the right direction. **Note:** You can not put them on or change their direction after flaring.

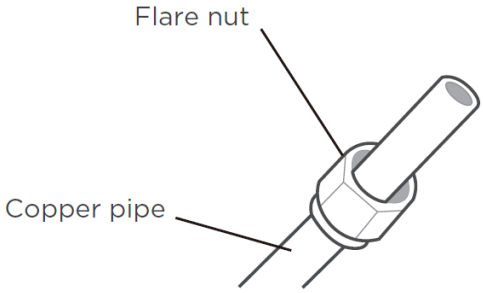

4. When ready to perform flaring work, remove PVC tape from the ends of the pipe.
5. Clamp flare form on the end of the pipe. The end of the pipe must extend beyond the edge of the flare form in accordance with the dimensions shown in the table below.

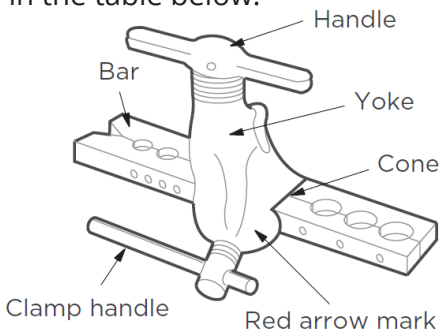

PIPING EXTENSION BEYOND FLARE FORM

Outer Diameter of Pipe	A	
	Min.	Max.
Ø1/4in (Ø6.35mm)	0.0275in (0.7mm)	0.05in (1.3mm)
Ø 3/8in (Ø9.52mm)	0.04in (1.0mm)	0.063in (1.6mm)
Ø1/2in (Ø12.7mm)	0.04in (1.0mm)	0.07in (1.8mm)
Ø 5/8in (Ø16mm)	0.078in(2.0mm)	0.086in (2.2mm)

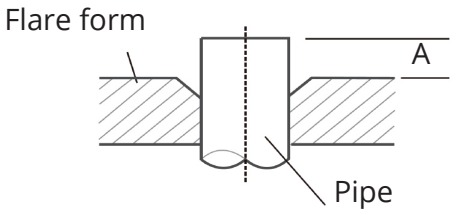

6. Place flaring tool onto the form.
7. Turn handle of the flaring tool clockwise until the pipe is fully flared.
8. Remove the flaring tool and flare form, then inspect the end of the pipe for cracks and even flaring.

7.2 Optional Pipe Connection Torque Requirements

! CAUTION

WHEN CONNECTING REFRIGERANT PIPES, BE CAREFUL NOT TO USE EXCESSIVE TORQUE OR DEFORM THE PIPING IN ANY WAY. YOU SHOULD FIRST CONNECT THE LOW-PRESSURE PIPE, THEN THE HIGH PRESSURE PIPE.

MINIMUM BEND RADIUS

When bending connective refrigerant piping, the minimum bending radius is 4in (10cm).

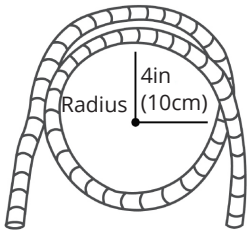

Instructions for Connecting Piping to Indoor Unit:

Step 1:

1. Align the center of the two pipes that you will connect.

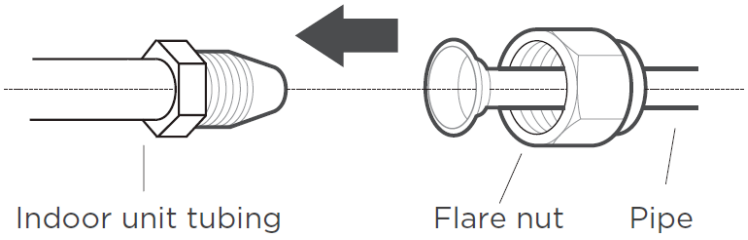

Step 2:

1. Tighten the flare nut as tightly as possible by hand.
2. Using a spanner, grip the nut on the unit tubing.
3. While firmly gripping the nut on the unit tubing, use a torque wrench to tighten the flare nut according to the torque values in the Torque Requirements table below.
4. Loosen the flaring nut slightly, then tighten again.

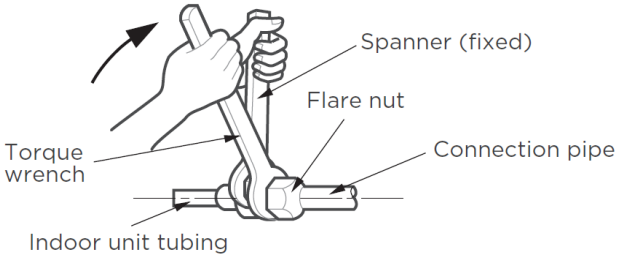

Torque Requirements:

Outer Diameter of Pipe	Tightening Torque	Flare Dimensions(B)	Flare Shape
Ø1/4in (Ø6.35mm)	18-20N.m (180-200kgf.cm)	0.33-0.34in (8.4-8.7mm)	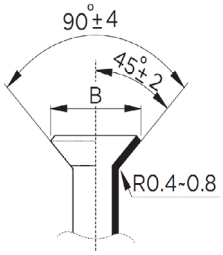
Ø3/8in (Ø9.52mm)	32-39N.m (320-390kgf.cm)	0.52-0.53in (13.2-13.5mm)	
Ø1/2in (Ø12.7mm)	49-59N.m (490-590kgf.cm)	0.64-0.65in (16.2-16.5mm)	
Ø5/8in (Ø16mm)	57-71N.m (570-710kgf.cm)	0.76-0.78in (19.2-19.7mm)	

DO NOT USE EXCESSIVE TORQUE

Excessive force can break the nut or damage the refrigerant piping. You must not exceed torque requirements shown in the table above.

7.3 Connecting Pipe to Outdoor Unit

NOTE

This section needs to be operated according to the TORQUE REQUIREMENTS chart on the previous page.

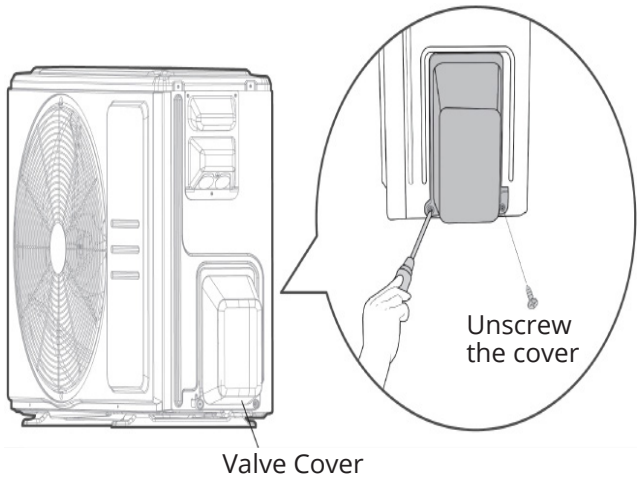

1. Unscrew the cover from the packed valve on the side of the outdoor unit.
2. Remove protective caps from ends of valves.
3. Align flared pipe end with each valve, and tighten the flare nut as tightly as possible by hand.
4. Using a spanner, grip the body of the valve. DO NOT grip the nut that seals the service valve.
5. While firmly gripping the body of the valve, use a torque wrench to tighten the flare nut according to the correct torque valves.
6. Loosen the flaring nut slightly, then tighten again.
7. Repeat Steps 3 to 6 for the remaining pipe.

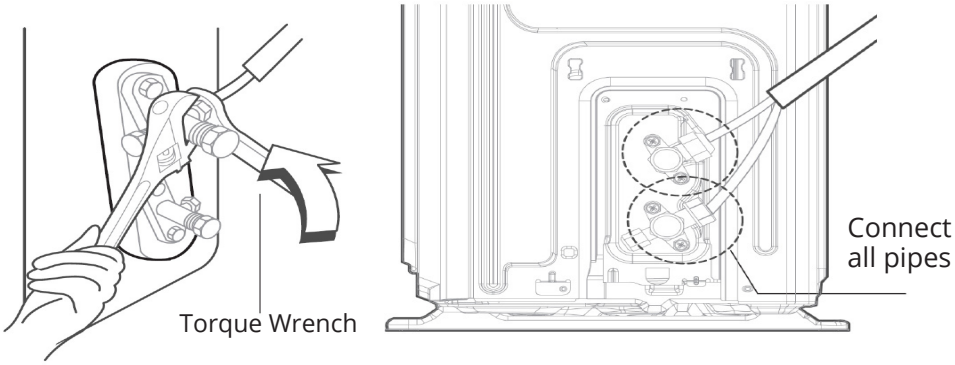

NOTE

Use the spanner to grip main body of valve. Torque from tightening the flare nut can snap off other parts of the valve.

8.1 Evacuation Instructions

Note: Air and foreign matter in the refrigerant circuit can cause abnormal rises in pressure, which can damage the unit, reduce efficiency, and cause injury. Make sure to evacuate the air inside the indoor unit and pipes with vacuum pump. Use a vacuum pump and manifold gauge to evacuate the refrigerant circuit, removing any non-condensible gas and moisture from the system. Evacuation should be performed upon initial installation, and during unit relocation. Incorrect installation due to ignoring instructions will cause serious problems with the unit.

BEFORE PERFORMING EVACUATION

1. Make sure the connective pipes between the indoor and outdoor units are connected properly.
2. Check to ensure all wiring is connected properly.

1. Connect the charge hose of the manifold gauge to service port on the outdoor unit's low pressure valve.
2. Connect another charge hose from the manifold gauge to the vacuum pump.
3. Open the Low Pressure side of the manifold gauge. Keep the High Pressure side closed.
4. Turn on the vacuum pump to evacuate the system.
5. Run the vacuum for at least 15 minutes, or until the vacuum measured using micron gauge to 500 microns. Close the Low Pressure side of the manifold gauge, then turn off the vacuum pump. Wait for 5 minutes, then check that there has been no change in system pressure.
6. If there is a change in system pressure, refer to Gas Leak Check section for information on how to check for leaks.

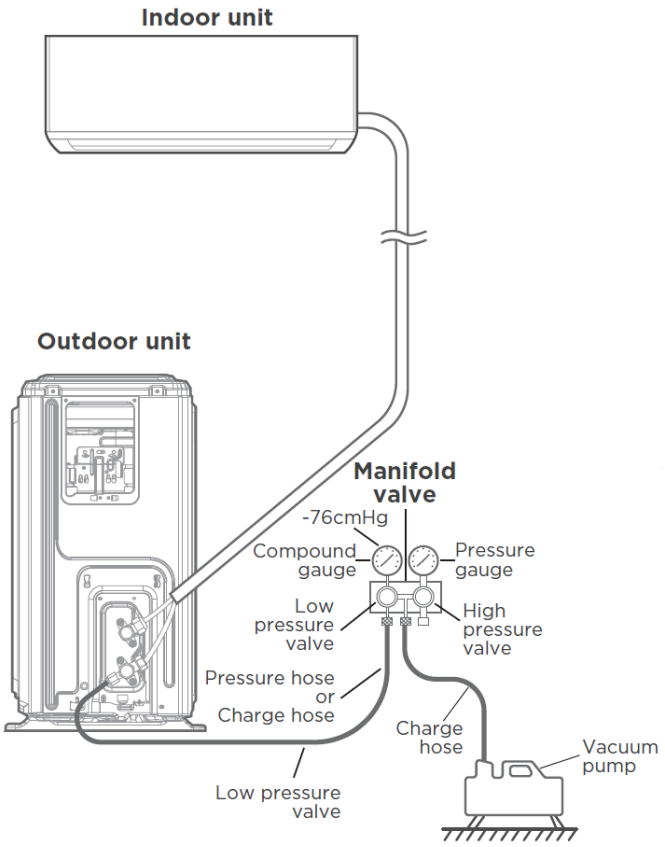

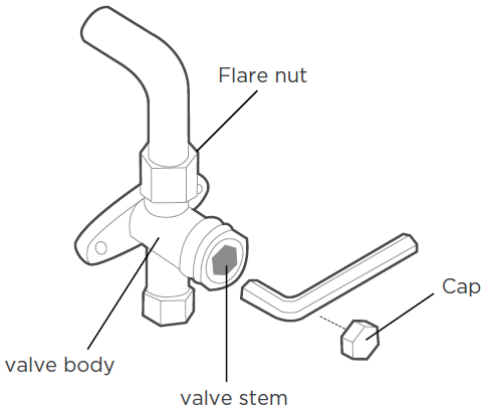

7. If there is no change in system pressure, unscrew the cap from the packed valve (High Pressure Valve). Insert hexagonal wrench into the packed valve (high pressure valve) and open the valve by turning the wrench in a 1/4 counterclockwise turn. Listen for gas to exit the system, then close the valve after 5 seconds.
8. Watch the Pressure Gauge for one minute to make sure that there is no change in pressure. The pressure gauge should read slightly higher than atmospheric pressure.
9. Remove the charge hose from the service port.
10. Using a hexagonal wrench, fully open both the high pressure and low pressure valves.
11. Tighten valve caps on all three valves (service port, high pressure, low pressure) by hand. You may tighten it further by using a torque wrench if needed.
12. If there is a change in system pressure, refer to Gas Leak Check section for information on how to check for leaks.
13. If there is no change in system pressure, unscrew the cap from the packed valve (High Pressure Valve). Insert hexagonal wrench into the packed valve (high pressure valve) and open the valve by turning the wrench in a 1/4 counterclockwise turn. Listen for gas to exit the system, then close the valve after 5 seconds.
14. Watch the Pressure Gauge for one minute to make sure that there is no change in pressure. The pressure gauge should read slightly higher than atmospheric pressure.
15. Remove the charge hose from the service port.
16. Using a hexagonal wrench, fully open both the high pressure and low pressure valves.
17. Tighten valve caps on all three valves (service port, high pressure, low pressure) by hand. You may tighten it further by using a torque wrench if needed.

Note: Adding Refrigerant

Some systems require additional charging depending on pipe lengths. The standard pipe length is 25ft (7.5m). The refrigerant should be charged from the service port on the outdoor units low pressure valve. The additional refrigerant that needs to be charged can be calculated using the formula below.

OPEN VALVE STEMS GENTLY

Make sure to open all valves after evacuation. When opening valve stems, turn the hexagonal wrench until it hits against the stopper. Do not try to force the valve to open further.

Additional Refrigerant Per Pipe Length

Connective Pipe Length (m)	Air Purging Method	Additional Refrigerant	
Standard Pipe Length	Vacuum Pump	N/A	
> Standard Pipe Length	Vacuum Pump	Liquid Side: Ø1/4in (Ø6.35mm) R454B: (Pipe length-standard length) x15g/m (Pipe length-standard length) x 0.16oz/ft	Liquid Side: Ø3/8in(Ø9.52mm) R454B: (Pipe length-standard length) x30g/m (Pipe length-standard length) x0.32oz/ft

WARNING

Do not mix refrigerant types. Make sure the additional amount of refrigerant to be charged is based on the pipe size and length.

9 ELECTRICAL & GAS LEAK CHECKS

9.1 Electrical & Gas Leak Checks

⚠ WARNING

RISK OF ELECTRIC SHOCK. ALL WIRING MUST COMPLY WITH LOCAL ELECTRICAL CODES, AND MUST BE INSTALLED BY A LICENSED ELECTRICIAN.

BEFORE TEST RUN

Only perform test run after you have completed the following steps:

- **Electrical Safety Checks**- Confirm that the unit's electrical system is safe and operating properly.
- **Gas Leak Checks** -Check all flare nut connections and confirm that the system is not leaking.
- Confirm that gas and liquid (high and low pressure) valves are fully open.

Electrical Safety Checks

After installation, confirm that all electrical wiring is installed in accordance with local regulations, and according to the Installation Manual.

Before Test Run:
Check Grounding Work

Measure grounding resistance by visual detection and with grounding resistance tester.

During Test Run:
Check for Electrical Leakage

During the Test Run, use an electro-probe and multimeter to perform a comprehensive electrical leakage test.

If electrical leakage is detected, turn off the unit immediately and call a licensed electrician to find and resolve the cause of the leakage. **Note:** This may not be required for some locations in North America.

Gas Leak Checks

There are two different methods to check for gas leaks:

1. Soap and Water Method

Using a soft brush, apply soapy water or liquid detergent to all pipe connection points on the indoor unit and outdoor unit. The presence of bubbles indicates a leak.

2. Leak Detector Method

If using a leak detector, refer to the device's operation manual for proper use instructions.

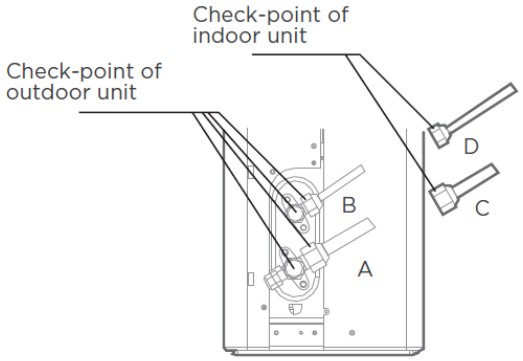

A: Low pressure stop valve
B: High pressure stop valve
C& D: Indoor unit flare nuts

AFTER PERFORMING GAS LEAK CHECKS

After confirming that all pipe connection points DO NOT leak, replace the valve cover on the outside unit.

- Test Run Instructions

The **Test Run** should be performed for at least 30 minutes.

- Connect power to the unit.
- Press the **On/Off** button on the remote controller to turn it on.
- Press the **MODE** button to scroll through the following functions, one at a time:

  Cool- Select lowest possible temperature.

  Heat- Select highest possible temperature.
- Let each function run for 5 minutes, and perform the following checks:

Checks to Perform	Pass/Fail	
No electrical leakage		
Unit is properly grounded		
All electrical terminals properly covered		
Indoor and outdoor units are solidly installed		
All pipe connection points do not leak	Outdoor (2):	Indoor (2):
Water drains properly from drain hose		
All piping is properly insulated		
Unit properly performs COOL function		
Unit properly performs heat function		
Indoor louvers properly rotate		
Indoor unit responds to remote control		

DOUBLE-CHECK PIPE CONNECTIONS
During operation, the pressure of the refrigerant circuit will increase. This may reveal leaks that were not present during the initial leak check. Take time during the TEST RUN to double-check that all refrigerant pipe connection points do not have leaks. Refer to **GAS LEAK CHECK** section for instruction.

After the TEST RUN is successfully completed, and you confirm that all checks from the list have passed, do the following:

- Using the remote control, return unit to normal operating temperature.
- Using insulation tape, wrap the indoor refrigerant pipe connections that you left uncovered during the indoor unit installation process.

IF AMBIENT TEMPERATURE IS BELOW 60°F (16°C)

You cannot use the remote control to turn on the COOL function when the ambient temperature is below 60°F. In this instance, you can use the MANUAL CONTROL button to test the COOL function.

- Lift the front panel of the indoor unit. **Note:** if there is a supporting rod located on the left or right side. Please use it to prop up the panel.
- The MANUAL CONTROL button is located on the right-hand side of the unit. Press two times to select FORCED COOL mode.
- Perform Test Run as normal.

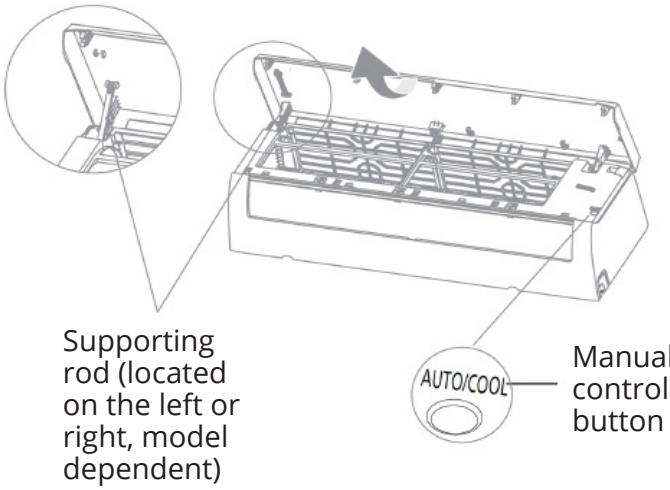

- Care & Maintenance

CAUTION

Clean the filter on your unit every two weeks. Failing to do so can lead to reduced cooling efficiency and damage to your health.

- Always turn off the unit and disconnect the power supply before cleaning or maintenance.
- Do not touch the air freshening (plasma) filter for at least 10 minutes after turning off the unit.
- Only use a soft, dry cloth to wipe the unit clean. You can use a cloth soaked in warm water to wipe it clean if the unit is especially dirty.
- Do not use chemicals to clean the unit.
- Do not use benzene, paint thinner, polishing powder or other solvents to clean the unit. This can damage to the surface, causing cracks or deformities.
- Do not use water hotter than 104°F(40°C) to clean the front panel as it can cause discoloration.

Cleaning Your Indoor Unit Air filter

Step 1:

Lift the front panel of the indoor unit. If the unit contains a supporting rod, use it to prop up the front panel.

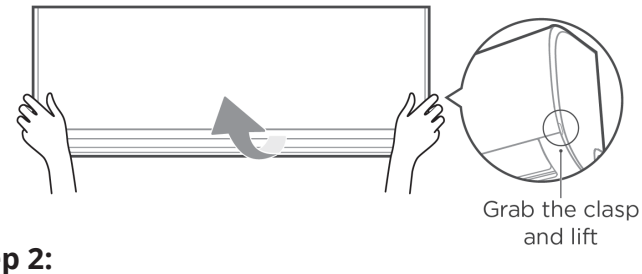

Step 2:

Grip the tap on the end of the filter, lift it up, then pull it toward you to pull the filter out.

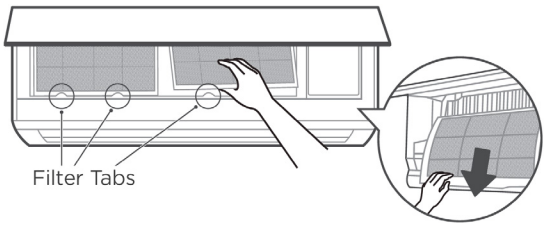

Step 3:

If your filter has a smaller air freshening filter, unclip it from the larger filter. Clean this air freshening filter with a hand -held vacuum.

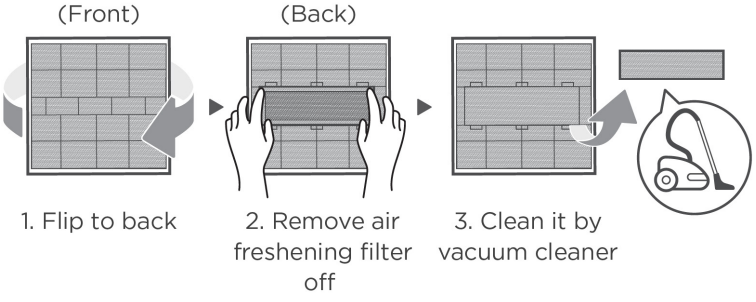

Step 4:

Clean the large air filter with warm, soapy water using a mild detergent. Rinse the filter with fresh water, then shake off the excess water. Dry it in a cool, dry place. Do not expose the filter to direct sunlight.

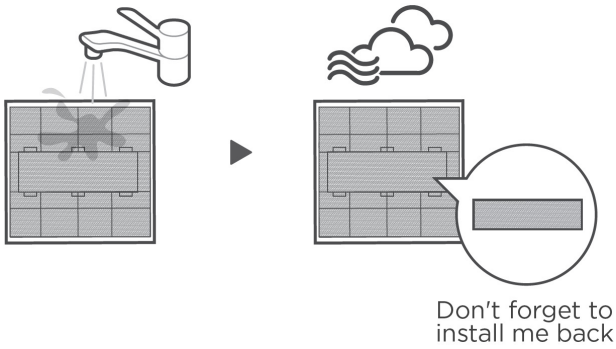

Step 5:

When dry, re-clip the air freshening filter to the larger filter, then slide back into the indoor unit. Finally, close the front panel of the unit.

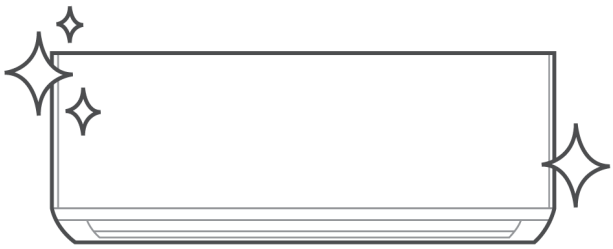

! CAUTION

- Before changing the filter or cleaning, turn off the unit and disconnect the power supply.
- When removing the filter, do not touch the metal parts in the unit. The sharp edges can cut through skin.
- Do not use water to clean the inside of the indoor unit. This can damage the insulation and can result in electric shock.
- Do not expose the filters to direct sunlight. This can shrink the filter.
- Any maintenance and cleaning of the outdoor unit should be performed by an authorized dealer or HVAC technician.
- Any unit repairs should be performed by a certified HVAC technician.

Maintaining the Unit

Long Periods of Non-Use
If you plan not to use the unit for an extended period of time, do the following:

Clean all filters.

Turn on fan function until unit dries out completely.

Turn off the unit & disconnect the power.

Remove batteries from remote control.

Pre-Season Inspection
After long periods of non-use, or before periods of frequent use, do the following:

Check for damaged wires.

Clean all filters.

Check for leaks.

Replace batteries.

Ensure nothing is blocking the air inlets & outlets.

12.1 Troubleshooting

! CAUTION

IF ANY OF THE FOLLOWING SITUATIONS OCCUR, IMMEDIATELY TURN OFF YOUR UNIT! DO NOT ATTEMPT TO REPAIR THESE ISSUES YOURSELF, CONTACT A CERTIFIED HVAC TECHNICIAN IMMEDIATELY.

- The wire is damaged or abnormally worn.
- You smell a burning odor.
- The unit emits loud or abnormal sounds.
- A power fuse blows or the circuit breaker frequently trips.
- Water or other objects fall into or out of the unit.

Common Issues

The following problems are not a malfunction and, in most situations, will not require repair.

Issue	Possible Causes
Unit does not turn on when pressing the on/off button	The unit has a 3-minute protection feature that prevents the unit from overloading. The unit cannot be restarted within three minutes of being turned off.
The unit changes from **COOL/HEAT** mode to **FAN** mode	The unit may change its settings to prevent frost from forming on the unit. Once the temperature increases, the unit will start operating in the previously selected mode again. The set temperature has been reached, at which point, the unit shuts off the compressor. The unit will continue operating when the temperature changes again.
The indoor unit emits white mist	In humid regions, a large temperature difference between the rooms air and the conditioned air can cause white mist.
Both the indoor and outdoor units emit white mist	When the unit restarts in HEAT mode after defrosting, white mist may be emitted due to moisture generated from the defrosting process.
The indoor unit makes noises	A rushing air sound may occur when the louver resets its position. A squeaking sound may occur after running the unit in HEAT mode due to expansion and contraction of the units plastic parts.
Both the indoor unit and outdoor unit make noises	Low hissing sound during operation: This is normal and is caused by refrigerant gas flowing through both indoor and outdoor units. Low hissing sound when the system starts, has just stopped running, or is defrosting: This noise is normal and is caused by the refrigerant gas stopping or changing direction. Squeaking sound: Normal expansion and contraction of plastic and metal parts caused by temperature changes during operation can cause squeaking noises.
The outdoor unit makes noises	The unit will make different sounds based on its current operating mode.

Issue	Possible Causes
Dust is emitted from either the indoor or outdoor unit	The unit may accumulate dust during extended periods of non-use, ans appear when the unit is turned on. This can be mitigated by covering the unit during long periods of inactivity.
The unit emits a bad odor	• The unit may adsorb odors from the environment (such as furniture, cooking, cigarettes, etc.) which can be emitted during operation. • The units filters have become moldy and should be cleaned.
The fan on the outdoor unit does not operate	During operation, the fan speed is controlled to optimize product operation.
Operation is erratic, unpredictable, or unit is unresponsive	Interference from cell phone towers and remote boosters may cause the unit to malfunction. In this case, try the following: • Disconnect the power, then reconnect. • Press ON/OFF button on remote control to restart operation.

Note: If problem persists, contact a local dealer or MRCOOL® customer service. Provide them with a detailed description of the unit malfunction as well as your model number.

! CAUTION

If the following issues occur, check the following solutions before contacting an HVAC technician

Problem	Possible Causes	Solution
Poor Cooling Performance	Temperature setting may be higher than ambient room temperature	Lower temperature setting
	The heat exchanger on the indoor or outdoor unit is dirty	Use CLEAN function by remote control to clean the affected heat exchanger
	The air filter is dirty	Remove the filter and clean it according to instructions
	The air inlet or outlet of either unit is blocked	Turn the unit off, remove the obstruction and turn it back on
	Doors and windows are open	Make sure that all the doors and windows are closed while operating the unit
	Excessive heat is generated by sunlight	Close windows and curtains during periods of high heat or bright sunshine
	Too many sources of heat in the room (people, computers, electronics, etc.)	Reduce amount of heat sources
	Low refrigerant due to leak or long-term use	Check for leaks, re-seal if necessary and top off refrigerant
	SILENCE function is activated (optional function)	SILENCE function can lower product performance by reducing operating frequency. Turn off Silence function.

Problem	Possible Causes	Solution
The unit is not working	Power Failure	Wait for the power to be restored
	The power is turned off	Turn on the power
	The fuse is burned out	Call HVAC technician to replace the fuse
	Remote control batteries are dead	Replace batteries
	The Unit's 3-minute protection has been activated	Wait three minutes after restarting the unit
	Timer is activated	Turn timer off
The unit frequently starts and stops	There's too much or too little refrigerant in the system	Call HVAC technician to check for leaks and recharge the system with refrigerant
	Incompressible gas or moisture has entered the system	Call HVAC technician to evacuate and recharge the system with refrigerant
	The compressor is broken	Call HVAC technician to replace the compressor
	The voltage is too high or too low	Install a monostat to regulate the voltage
Poor heating performance	The outdoor temperature is extremely low	Use auxiliary heating device
	Cold air is entering through doors and windows	Make sure that all doors and windows are closed during use
	Low refrigerant due to leak or long-term use.	Call HVAC technician to check for leaks, reseal if necessary and top off refrigerant
Indicator lamps continue flashing	The unit may stop operation or continue to run safely. If the indicator lamps continue to flash or error codes appear, wait for about 10 minutes. The problem may resolve itself. If not, disconnect the power, then connect it again, then, turn on the unit. If the problem persists, disconnect the power and contact MRCOOL® customer service.	
Error code appears and begins with the letters as following in the windows display of the indoor unit: **E(x), P(x), F(x)** **EH(xx),EL(xx), EC(xx)** **PH(xx), PL(xx), PC(xx)**		

Note: If the problem persists after performing the checks and diagnostics above, turn off you unit immediately and contact an authorized service center.

12.2 Error Display (Indoor Unit)

When the indoor unit encounters a recognized error, an error code will be displayed; the error codes are described in the tables below:

Display	Error Information	Solution
dF	Defrost	Normal Display, not error code
CL	Filter cleaning reminder (power on display for 15 seconds)	
CL	Active Clean	
nF	Filter replacement reminder (power on display for 15 seconds) (For some models)	
FP	Heating in room temperature under 46.4°F (8°C)	
FC	Forced Cooling	
AP	AP mode of WIFI connection	
CP	Remote switched off	
EH 00	IDU EEPROM malfunction	TS01-IDU
EH OA	Indoor EEPROM parameter error	TS01-IDU
EL 01	IDU & ODU communication error	TS02-S-INV
EH 02	Zero-crossing signal detection	TS03
EH 03	IDU Fan speed out of control	TS04-S-IDU
EC 51	ODU EEPROM parameter error	TS01-ODU
EC 52	ODU coil temp. sensor (T3) error	TS05-ODU
EC 53	ODU ambient temp. sensor (T4) error	TS05-ODU
EC 54	COMP. discharge temp. sensor (TP) error	TS05-ODU
EC 56	IDU coil outlet temp. sensor (T2B) error (Multi-zone)	TS05-ODU
EH 60	IDU room temp. sensor (T1) error	TS05-ODU
EH 61	IDU pipe temp. (T2) sensor error	TS05-ODU
EC 07	ODU fan speed out of control	TS04-ODU
EH 06	IDU main control board and display board communication error	TS07
FH CC	Refrigerant sensor error	TS05-N10
EH Cl	Refrigerant sensor detects leakage	TS06-N10
EH C2	Refrigerant sensor is out of range and leakage is detected	TS06-N10
EH C3	Refrigerant sensor is out of range	TS05-N10
EC Cl	Other IDU refrigerant sensor detects leakage	TS06-N10

When the indoor unit encounters a recognized error, an error code will be displayed; the error codes are described in the tables below:

Display	Error Information	Solution
EL 0C	System Lack refrigerant	TS06-INV
PC 00	ODU IPM module protection	TS09-S
PC 01	ODU voltage protection	TS10-S
PC 02	Compressor top (or IPM) temp. protection	TS11-S-INV
PC 04	Inverter compressor drive error	TS12-S
PC 03	Pressure protection (low or high pressure)(for some models)	TS26-INV
PC 0L	Low ambient temperature (for some models)	LP
----	IDUs mode conflict (Multi-zone)	TS14

For other errors:

The display board may show a garbled code or a code undefined by the service manual. Ensure that this code is not a temperature reading.

Troubleshooting:

Test the unit using the remote control. If the unit does not respond to the remote, the indoor PCB requires replacement. If the unit responds, the display board requires replacement.

88 flash frequency:

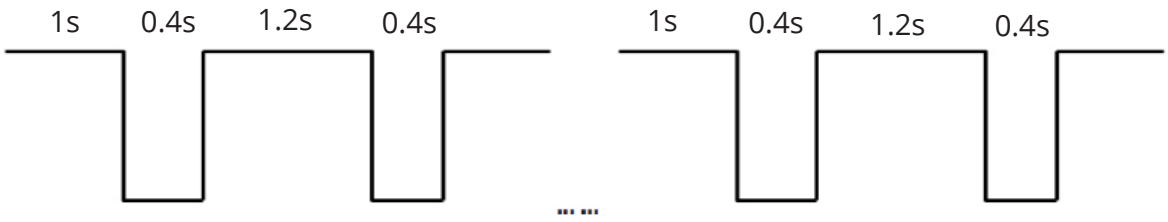

12.3 Error Display (Outdoor Unit with Auxiliary Board)

Display	Error Information	Solution
dF	Defrost	Normal display, not error code
FC	Forced Cooling	
EC 51	ODU EEPROM parameter error	TS01-ODU
EL 01	IDU & ODU communication error	TS02-S-INV
PC 40	Communication error between outdoor main chip and compressor driven chip	TS31
PC 08	ODU overcurrent protection	TS08-S
PC 10	ODU low AC voltage protection	TS10-S
PC 11	ODU main control board DC bus high voltage protection	TS10-S
PC 12	ODU main control board DC bus low voltage protection/341 MCE error	TS10-S
PC 00	ODU IPM module protection	TS09-S
PC 0F	PFC module protection	TS30
EC 71	Over current failure of ODU DC fan motor	TS04-ODU
EC 72	Lack phase failure of ODU DC fan motor	TS38
EC 07	ODU fan speed out of control	TS04-ODU
PC 43	ODU compressor lack phase protection	TS39
PC 44	ODU zero speed protection	TS08-S
PC 45	ODU IR chip drive failure	TS40
PC 46	Compressor speed has been out of control	TS08-S
PC 49	Compressor overcurrent failure	TS08-S
PC 30	System high pressure protection	TS26-INV
PC 31	System low pressure protection	TS26-INV
PC 0A	High temperature protection of condenser	TS27-INV
PC06	Discharge temperature protection of compressor	TS32
LC 06	High temperature protection of Inverter module (IPM)	TS11-S-INV
PC 02	Compressor top (or IPM) temp. protection	TS11-S-INV
PH90	High temperature protection of evaporator	----
PH 91	Low temperature protection of evaporator	----
EC 52	ODU coil temp. sensor (T3) error	TS05-ODU
EC 53	ODU ambient temp. sensor (T3) error	TS05-ODU
EC 54	COMP. discharge temp. sensor (TP) error	TS05-ODU
EC 50	Open or short circuit of outdoor unit temperature sensor (T3, T4, TP)	TS05-ODU
PC 0L	Low ambient temperature protection (for some models)	LP

12.4 Quick Maintenance by Error Code

If you do not have the time to test which specific parts are faulty, you can change the required parts according to the error code. You can find the parts to replace by error code in the following table.

Part Requiring Replacement	Error Code									
	EH 00/ EH 0A	EL 01	EH 02	Eh 03	EH 60	EH 61	EH 0B	EL 0C	EC 56	FH CC
Indoor PCB	√	√	√	√	√	√	√	√	X	√
Outdoor PCB	X	√	X	X	X	X	X	X	√	X
Display Board	X	X	X	X	X	X	√	X	X	X
Indoor Fan Motor	X	X	X	√	X	X	X	X	X	X
T1 Sensor	X	X	X	X	√	X	X	X	X	X
T2 Sensor	X	X	X	X	X	√	X	√	X	X
T2B Sensor	X	X	X	X	X	X	X	X	√	X
Refrigerant Sensor	X	X	X	X	X	X	X	X	X	√
Reactor	X	√	X	X	X	X	X	X	X	X
Compressor	X	X	X	X	X	X	X	X	X	√
Additional Refrigerant	X	X	X	X	X	X	X	√	X	X

Part Requiring Replacement	Error Code									
	EC 53	EC 52	EC 54	EC 51	EC 07	PC 00	PC 01	PC 02	PC 03	PC 04
Outdoor PCB	√	√	√	√	√	√	√	√	√	√
Indoor Fan Motor	X	X	X	X	X	X	X	X	X	X
Outdoor Fan Motor	X	X	X	X	√	√	X	√	X	√
T3 Sensor	X	√	X	X	X	X	X	X	X	X
T4 Sensor	√	X	X	X	X	X	X	X	X	X
TP Sensor	X	X	√	X	X	X	X	X	X	X
Reactor	X	X	X	X	X	X	√	X	X	X
Compressor	X	X	X	X	X	√	X	X	X	√
IPM Module Board	X	X	X	X	X	√	√	√	X	√
High Pressure Protector	X	X	X	X	X	X	X	√	X	X
Low Pressure Protector	X	X	X	X	X	X	X	X	√	X
Additional Refrigerant	X	X	X	X	X	X	X	X	√	X

Part Requiring Replacement	Error Code				
	PC 06	PC 08/44/49	PC 0A	PC OF	PC 40
Outdoor PCB	√	√	√	√	√
Outdoor Fan Motor	X	√	√	X	X
T3 Sensor	X	X	√	X	X
TP Sensor	√	X	X	X	X
Pressure Sensor	X	X	X	X	X
Reactor	X	√	X	√	X
Compressor	X	X	X	X	X
IPM Module Board	X	√	X	X	√
High Pressure Valve Assembly	√	X	X	X	X
High Pressure Protector	X	X	X	X	X
Low Pressure Protector	X	X	X	X	X
Additional Refrigerant	√	X	√	X	X
Electric Control Box	X	X	X	X	√

Part Requiring Replacement	Error Code				
	PC 41	PC 43	PC 10/11/12	PC 30	PC 31
Outdoor PCB	√	√	√	√	√
Outdoor Fan Motor	X	X	X	√	X
T3 Sensor	X	X	X	X	X
TP Sensor	X	X	X	X	X
Pressure Sensor	X	X	X	X	X
Reactor	X	X	√	X	X
Compressor	X	√	X	X	X
IPM Module Board	X	X	√	X	X
High Pressure Valve Assembly	X	X	X	X	X
High Pressure Protector	X	X	X	√	X
Low Pressure Protector	X	X	X	X	√
Additional Refrigerant	X	X	X	X	√



MRCOOL®

COMFORT MADE SIMPLE

MRCOOL® Advantage Series

Installation & Owner's Manual

The design and specifications of this product and/or manual are subject to change without prior notice.
Consult with the sales agency or manufacturer for details.